

MAINTENANCE MANUAL

of the manufacturer of hot air balloons

Schroeder fire balloons GmbH

Gewerbegebiet Am Bahnhof 12
D – 54338 Schweich
Deutschland

Phone +49 6502 930-4
Fax +49 6502 930-500

mail@schroederballon.de
www.schroederballon.de

Type Certificate Data Sheet No.: EASA.BA.016 and EASA.BA.010,
Approved as Production Organization ref. DE.21G.0038
Approved as Design Organization ADOAP ref. EASA.AP038
Approved as Continuing Airworthiness Organization ref. DE.CAO.0065

Schweich, 30 June 2021
Date

Signature

List of content

Applicability I

List of content II

Record of Amendments V

List of effective pages VI

1. General 1-1

1.1. Introduction 1-1
1.2. Applicability 1-1
1.3. Amendments 1-1
1.4. Maintenance categories 1-2

2. Airworthiness limitations (EASA approved) 2-1

2.1. Certification basis 2-1
2.2. Inspection intervals 2-1
2.3. Responsible personnel 2-1
2.4. Inspection checks 2-1
2.5. Life time limited parts 2-1
2.6. Minimum fabric strength 2-1

3. Envelope maintenance and repair 3-1



3.1. General information concerning the envelope 3-1
3.1.1. Deflation Systems 3-2
3.1.1.1. Smart Vent 3-2
3.1.1.2. Easy Vent 3-2
3.1.1.3. Para Vent 3-2
3.1.1.4. Lite Vent 3-2
3.1.1.5. Removing the Paraquick – safety device 3-2
3.2. Envelope repair procedures 3-2
3.2.1. Small tears and holes 3-3
3.2.2. Panel repairs 3-4
3.2.3. Repair instructions for Nomex® Fabric 3-7
3.2.4. Repair instructions for vertical- and horizontal load tapes 3-7
3.2.5. Repair and modification of flying wires 3-7
3.2.6. Line repair instructions 3-12
3.3. Procedures following incidents or specific occurrences 3-13
3.4. 100-houres- or annual inspection 3-18
3.4.1. General inspection criteria 3-18
3.4.2. Fault tolerances for assessing airworthiness 3-20

4. Repair and maintenance of the burner 4-1



4.1. General 4-1
4.2. Repair procedures 4-1
4.2.1. General 4-1
4.2.2. Cleaning and care of the burner 4-1
4.3. Constituent parts of the burner FB 6 4-2
4.3.1. Removal of Piezo-ignition unit 4-3
4.3.2. Removal of pilot light assembly 4-4
4.3.3. Removal of pilot light valve assembly 4-5
4.3.4. Replacement of burner coils - take-off burner FB6 4-6
4.3.5. Replacement of burner coils - silent (cow) burner 4-7
4.3.6. Removal of silent (cow) burner valve assembly 4-8
4.3.7. Removal of silent (cow) burner valve 4-9
4.3.8. Removal of pressure gauges 4-10
4.3.9. Removal of blast valve 4-11

Record of Amendments

Amendment no.	Affected chapter	Amended pages	Date of issue
0	all	all	October 2011, Chapter 2 EASA-appr.: 10036979
1	4	Pages 4.17 to 4.29 inserted due to new burner FB 7	August 2013; EASA approval #10047030
2	3; appendix 1	3-2; 3-3; 3-12; 3-15; 3-17-18; 3-20; App. 1	May 2019 EASA approval #10070119
3	4; 6	4-5; 4-8; 4-13; 4-20; 4-23; 4-26; 6-13	August 2019 EASA approval #10070719
4	4; 6	4-1; 4-13; 6-4	November 2019 EASA approval# 10071812
5	3	3-7; App. 4, App. 5	May 2020 EASA approval# 10073341
6	5	5-4 to 5-7	June 2020 EASA approval# 10073560
7	2; 3; 4	2-1; 3-1; 3-2; 3-19; 3-20; 4-5; 4-8; 4-12; 4-13; 4-20; 4-23; 4-26; 4-27;	June 2021 EASA Approval nos. 10076828 and 10076830

tab.0-1: Record of Amendments

List of effective pages

Chapter	Page	Date of issue
Cover	0	May 2020
	I	Okt 2011
	II	May 2020
	III	May 2020
	IV	May 2020
	V	May 2020
	VI	May 2020
1	1-1	Okt. 2011
	1-2	Okt. 2011
2	2-1	Jun. 2021
3	3-1	Jun. 2021
	3-2	Jun. 2021
	3-3	Okt. 2011
	3-4	Okt. 2011
	3-5	Okt. 2011
	3-6	Okt. 2011
	3-7	May 2020
	3-8	Okt. 2011
	3-9	Okt. 2011
	3-10	Okt. 2011
	3-11	Okt. 2011
	3-12	May 2019
	3-13	Okt. 2011
	3-14	Okt. 2011
	3-15	May 2019
	3-16	Okt. 2011
	3-17	May 2019
	3-18	May 2019
	3-19	Jun. 2021
	3-20	Jun. 2021
4	4-1	Nov. 2019
	4-2	Okt. 2011
	4-3	Okt. 2011
	4-4	Okt. 2011
	4-5	Jun. 2021
	4-6	Okt. 2011
	4-7	Okt. 2011
	4-8	Jun. 2021
	4-9	Okt. 2011
	4-10	Okt. 2011
	4-11	Okt. 2011
	4-12	Jun. 2021
	4-13	Jun. 2021
	4-14	Okt. 2011
	4-15	Okt. 2011
	4-16	Okt. 2011
	4-17	Aug. 2013
	4-18	Aug. 2013
	4-19	Aug. 2013
	4-20	Jun. 2021
	4-21	Aug. 2013
	4-22	Aug. 2013
	4-23	Jun. 2021
	4-24	Aug. 2013
	4-25	Aug. 2013
	4-26	Jun. 2021
	4-27	Jun. 2021
	4-28	Aug. 2013
	4-29	Aug. 2013
	4-30	Aug. 2013
	4-31	Okt. 2011
	4-32	Okt. 2011
	4-33	Okt. 2011
	4-34	Okt. 2011
	4-35	Okt. 2011
5	5-1	Aug. 2013
	5-2	Okt. 2011
	5-3	Okt. 2011
	5-4	Jun. 2020
	5-5	Jun. 2020
	5-6	Jun. 2020
	5-7	Jun. 2020
6	6-1	Okt. 2011
	6-2	Okt. 2011
	6-3	Okt. 2011
	6-4	Nov. 2019
	6-5	Okt. 2011
	6-6	Okt. 2011
	6-7	Okt. 2011
	6-8	Okt. 2011
	6-9	Okt. 2011
	6-10	Okt. 2011
	6-11	Okt. 2011
	6-12	Okt. 2011
	6-13	Aug. 2019
	6-14	Okt. 2011
	6-15	Aug. 2013
7	7-1	Oct. 2011
8	8-1	Oct. 2011
	8-2	Oct. 2011
	8-3	Oct. 2011
	8-4	Oct. 2011
	8-5	Oct. 2011
App.	1	May 2019
App.	2	Apr. 2015
App.	3	Juni 2017
App.	4	May 2020
App.	5	May 2020

tab.0-2: List of effective pages

2. Airworthiness limitations (EASA approved)

The chapter 2, Airworthiness limitations is EASA approved.

2.1. Certification basis

This part of the maintenance manual is EASA-approved and specifies the required basis for certification. This maintenance manual is in compliance with requirements CS HB31.

2.2. Inspection intervals

Checks are to be carried-out every 12 months or after 100 operating hours within the scope of a 100-hours-inspection, whichever occurs first.

2.3. Responsible personnel

The inspections are to be performed by a maintenance organization approved by a national Aviation Authority The personnel performing the activities must be qualified appropriately.

2.4. Inspection checks

The results of the annual inspection or 100-hour-inspection respectively are documented in check lists. Check lists are specified in Chapter IV.

2.5. Life time limited parts

When the life of a life-limited part has expired, it must be replaced by a new one. This includes e.g. burner hoses. They are to be replaced after 10 years.

Component	Life limitation	Comment
Burner hoses	10 years from packaging	Date on crimped hose sleeve stamped on the fuel cylinder end
Safety valve of fuel cylinder VA50 and VA70	10 years from installation	See also Chapter 1.1; maximum shelf life of 5 years before installation

tab.2-1: Lifetime limited parts

2.6. Minimum fabric strength

The envelope fabric has no life limitation. Its strength is the limiting factor. The value is 14 daN (14 kp) and equates to the lowest acceptable strength resulting from the grab-test-procedure. This minimum strength must be determined during the airworthiness review at the most critical areas of the envelope and the parachute (view Grab-test 3.4.1). If the fabric strength in these areas is close to the limit, the inspector can specify a premature repetition of the grab test. (e.g. after 50 flight hours). The procedure and the areas that need to be grab tested are defined in Chapter 3.4.1.



3. Envelope maintenance and repair

3.1. General information concerning the envelope

The envelope fabric consists of high-strength and elastic nylon texture with a Polyurethane coating or high-strength Polyester fabric texture with a Polyurethane coating. The tensile strength of a 5 cm wide test sample strip of new envelope fabric is approximately 650 N. Because of the high elasticity of the nylon fabric, which has been used by the manufacturer Schroeder ever since, the envelope can absorb high loads during shock loading e.g. during gusts. The elasticity of new Nylon fabric is more than 30%. The elasticity of new Polyester fabric is approximately 20%A stronger but also heavier nylon fabric with special coating (Thermogrip) and a higher tensile strength of 120 to 130 daN is used in the upper area of the envelope by customer request.
The life of the envelope is impaired mainly by high temperatures, UV radiation and storage in humid conditions. Especially elevated temperatures and simultaneous high UV radiation accelerate the ageing of the envelope. Therefore, Schroeder fire balloons is limiting the temperature in the envelope in continuous operation to 110 °C.
The actual fabric temperature however is lower due to cooling from the outside, by up to 20 °C depending on the ambient temperature. This needs to be taken into account especially when measuring the surface temperature using infra-red devices, which is why they are not recommended by Schroeder fire balloons. The more porous the coating, the more hot air is flowing through the fabric and is increasing therefore its temperature.
The temperature gradients between fabric temperature and the temperature inside the envelope are also dependent from the colour. The area of the envelope around the edge of the parachute and around the turning vents is especially stressed by temperature, as the boundary* layer is disturbed by the air flow. The highest stress is in the upper third of the envelope. There, the temperature and the UV-radiation is the highest at the same time, so that this area is ageing the fastest. This makes it necessary to observe this section especially. This needs to be taken in consideration due to the fact that the ageing process is strongly dependent from the colour. The pressure inside the envelope is increasing continuously from the bottom opening 0 Pa (0 mbar) to the top of approximately 92 Pa (0,92 mbar) depending on balloon height and temperature difference.
It must be taken into consideration especially for older balloons with a high number of operating hours, that the fabric of an envelope of 7000 m3 is subject to approximately twice the stress as an envelope of 3000 m^3.
A dry environment is recommended for the storage the envelope. A moist envelope should be dried as soon as possible and as careful as possible. Already after a few days, mould may develop depending on temperature and the number of mould spores present. Moist envelope fabric may develop after a few days mould stains. During this, the coating will be damaged permanently by mould and bacteria.
There are different possibilities to dry a balloon. The process should be as careful as possible. It is not recommended e.g. to inflate the balloon, load the balloon heavily and to immediately heat it with excessive temperature. This alone would not carry the moisture out of the balloon. Although the hot air absorbs a lot of moisture but this air remains inside the envelope. It is therefore recommended to vent the balloon for a while using the inflation fan and only after that to inflate the balloon with warm air with temperature below 80 °C. Subsequently, open the parachute now and then so that the dissolved moisture can escape. The envelope is only, when all load tapes are free of moisture. It may as well be required to spread-out the envelope in a vented room for a while. If the crown line is still moist, it must remain outside the envelope sack. Otherwise large sections of the envelope coating will be damaged.

* - the boundary layer is an insulating layer of air, which forms on the inside of the envelope in undisturbed condition. If air flow is generated (e.g. by operating the parachute) this layer is disturbed and loses its insulating characteristics. It re-forms anew when the air flow stops.



Load tapes that have not been dried properly can be detected later on the mould formation (dark spots). The fabric adjacent to these load tapes may also be infested with mould.
The process takes respectively longer in a hall or hangar if the envelope cannot be dried outside due to adverse weather. The higher the difference between hangar temperature and the outside temperature is and the better the venting, the faster the envelope will dry. For that it is necessary to turn the envelope fabric a number of times. The less chemical substances are coming into contact with the envelope, e.g. fertilised soil at take-off or landing, the better for the life of the balloon

3.1.1. Deflation Systems

There are different deflation systems available for Schroeder fire balloons envelopes. The availability depends on the volume of the envelope. Already existing envelopes can only be equipped with a different deflation system by manufacturer. The different Systems will be briefly described in the following paragraphs. Line and Parachute repairs are described in this chapter. The desciptions apply to all systems.

3.1.1.1. Smart Vent

The Smart Vent is a fast deflation system with a red and a red-white control cord. The function of these cords is comparable to the Paraquicksystem. The function is described in the Flight Manual. The Smart Vent is available for envelopes with a volume of 3000 m³ and bigger (3000m³ included).

3.1.1.2. Easy Vent

The Easy Vent is equipped with a white and a red control cord. The red Parachute line is used for ventilation during flight and for landing close to the ground. The white line is used for closing the Parachute. The white line is equipped with a weight next to the pulley. It weights approximately 4 kg and causes a constant pulling force to the parachute edges. The Easy Vent can be used for envelopes with a volume up to 2600 m³ (2600m³ included).

3.1.1.3. Para Vent

The Para Vent is a slightly modified Parachute System with a red-white control cord. There is no difference in operation compared to the Parachute System. The Para Vent can be used for envelopes with a volume up to 2600 m³ (2600m³ included).

3.1.1.4. Lite Vent

The Lite Vent is a fast deflation system for balloons with a volume starting from 6000 m³. The system is equipped with 3 lines to actuate the parachute. The operating instructions can be found in the flight manual.

3.1.1.5. Removing the Paraquick – safety device

The Paraquick safety device can be removed or installed to the Paraquick system on demand by the operator. This change must be noted and released to service in the aircraft logbook. In order to remove the Paraquick saftey device, the shrink hose attached to the end of the red line must carefully be heated up with a handheld hot air fan to make it soft. The shrink hose can now be cut open with scissors along the red line without damaging the line. The karabiner and the Paraquick safety device can be removed from the red line. The karabiner must be attached to the red line again, using a 10 cm long piece of shrink hose containing a hot glue layer inside.

3.2. Envelope repair procedures

B C D

For damages to the envelope fabric as well as to the load tapes, it is to be distinguished between areas of the lower and of the upper section of the envelope. Damages of any kind in the upper area must be considered more critical then damages in the lower area. A Polyester envelope can be repaired with Nylon fabric in isolated places. This is not possible vice versa.
(See also Chapter 3.3 Procedures following incidents or specific occurrences)



Grab –Test procedure

The grab test procedure is carried-out on the balloon fabric without removal of a test sample from the envelope. The clamping blocks are to be fitted with soft protectors to avoid tearing the fabric. The clamping area is 25 x 25 mm and the distance between the clamping blocks is 75 mm. The test is to be carried-out at 20° C ambient temperature using continuous increase of the spring loading without acceleration. Any acceleration means an increase and corruption of the spring load. Repaired areas are excluded from the test. The fabric used for the repair is usually a lot stronger and not representative due to fewer operating hours. The tests must be executed in the areas of maximum tensile stress. This area of the Parachute starts at a distance of 0,75 m from the Parachute edge to the centre of the Parachute. The area of maximum tensile stress of the envelope depends on the envelope size and is located in the following panels:

Envelope Volumes	**Panel for fabric testing**
1200 m³ – 1800 m³	panel 4 counted from top edge down
2000 m³ – 2600 m³	panel 5 counted from top edge down
3000 m³ – 4500 m³	panel 6 counted from top edge down
5000 m³ – 7000 m³	panel 7 counted from top edge down
8500 m³ + 10500 m³	panel 8 counted from top edge down
12500 m³	panel 9 counted from top edge down

All different colours and fabric types must be tested in this height of the envelope. The test must be performed in vertical und horizontal direction and also in a distance of approximately 15 cm to a seam of an adjacent upper or lower panel.

If the fabric tears at 14 daN (14 kp), the test needs to be repeated in at least 5 different locations. If there are no other failures, the damaged section may be repaired. In this case, it is recommended to impose a limitation to further operating hours to e.g. 50 hours, after which the grab test is to be repeated. The inspector needs to make a judgement in borderline cases which if any limitations are imposed. The inspector needs to take the overall condition of the balloon into account based on his experience and furthermore needs to consider the size of the balloon (a volume of 7000 m³ translates into approximately twice the stress than for a balloon with a volume of 3000 m³).



pic.3.12. Grab-Test procedure



3.4.2. Fault tolerances for assessing airworthiness

Type of fault	Tolerance
Tears or burn damage on the Nomex®-scoop	Max 5% of the surface, repair as soon as possible
Any damage on horizontal or vertical load tapes	None
porosity	No exact limits. If in doubt, the inspector may mandate a test flight to establish that the balloon can be operated safely. It is required that the balloon can be flown with full loading for one hour and needs to retain a fuel reserve of 30 minutes after landing
Strength of envelope fabric	The fabric grab tests must obtain a tensile strength of 14 daN for the panels listed in 3.4.1. The grab test procedure is described in 3.4.1. In borderline cases, the inspector may impose a repeat of the grab test ahead of schedule (e.g. after 50 further hours). Also refer to section 'Grab-Test procedure'.
Strength of parachute fabric	The parachute grab tests must obtain a tensile strength of 14 daN in every colour and every fabric type starting at a distance of 0,75m to the edge of the parachute going towards the centre.
Stainless steel flying wires	No significant damages are acceptable. A maximum of 5 strands may be damaged. All vertical load tape loops on the envelope must be free of damage. If discolouration of a flying wire is present, check its flexibility. Only a slight kink in only one of the flying wires is acceptable. If in doubt, contact maintenance organisation.
Parachute line	None, except marginal impairment due to heat, if the Kevlar®-core is not yet visible.
Triangles connecting flying wires with envelope	None
Karabiners of all lines (Parachute fast deflation system, turning vents)	None
Line pulleys	None
All lines in the balloon including knots	None
All attachment points of lines in the balloon	None
Wires and temperature gauge	None
Velcro®-taps of parachute or fast deflation system	The Velcro®-taps must not open during inflation in wind conditions with surface winds of up to 10 knots.

tab.3-6: Fault tolerances for assessing airworthiness



4.3.3. Removal of pilot light valve assembly

It is recommended to replace the O-ring (1) at the annual inspection - but at least every 100 hours. For that, the pilot light valve needs to be removed. The socket cap screws (8) are unscrewed and the entire pilot light valve is then removed from the manifold block. Remove old O-ring and clean all sealing surfaces of the valve with silicone remover and a lint free cloth. After that clean with residue free break cleaner. The new O-ring can now be greased with Teccem Flouronox Paste KL and installed to the stem. The valve can now be fitted back into the manifold block. The socket cap screws (8) are fitted with new anti-vibration washers (7) and fixed with Loctite® 243 and then re-installed with a tightening torque of 0.5 Nm. If any of the other parts of the pilot light valve are faulty, the entire valve needs to be sent to the manufacturer for repair.

B C D

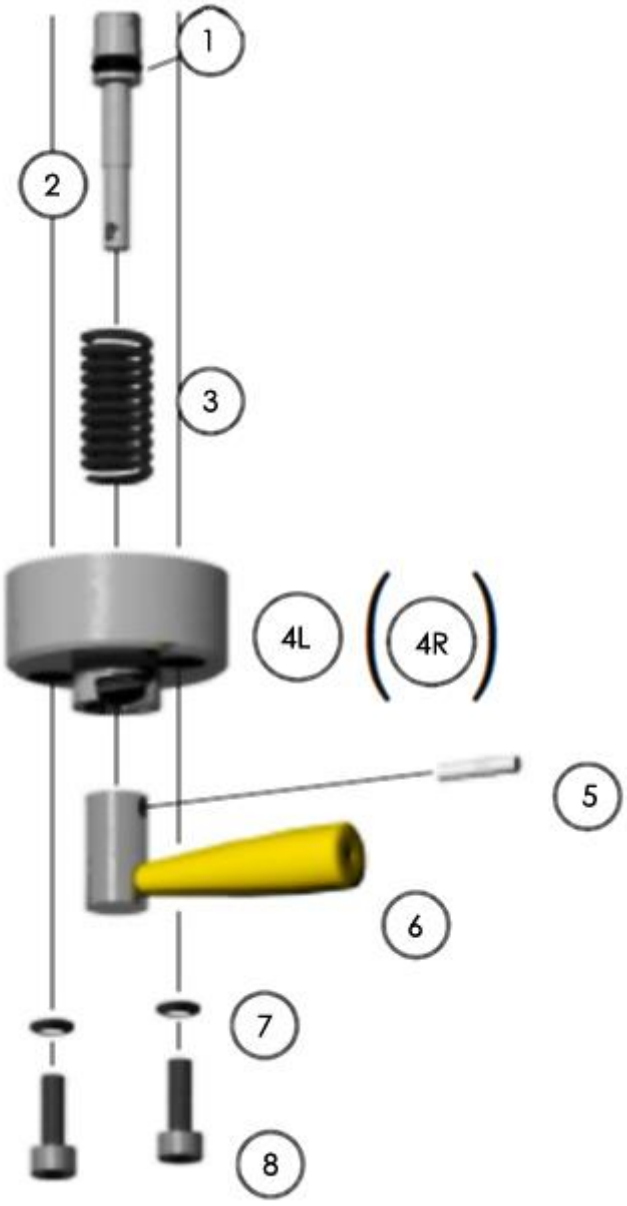

No.	Title
1	O-ring 4,47 x 1,78
2	valve piston
3	pressure coil spring
4 L/R	upper body of pilot light L/R
5	grub screw M3
6	pilot light operating lever
7	anti Vibration washer DN 4,3
8	socket cap screw M4x16

pic.4-4: Pilot light valve assembly

4.3.6. Removal of silent (cow) burner valve assembly

It is recommended to replace the O-rings (6+11) every one to two years. To remove the silent (cow) burner valve, both Allen screws (1) are removed. Then the valve is removed from the manifold block. Remove old O-ring (11). Clean all sealing surfaces of the valve with silicone remover and a lint free cloth. After that clean with residue free break cleaner. The new O-ring can now be installed and greased with Teccem Flouronox Paste KL and fitted into the manifold block. To replace the O-ring (6), the pin (4) needs to be removed from the valve piston (10) using a punch. Following, the operating level (3) and the Nylon washer (5) are removed and the O-ring replaced. For re-assembly, the pin (4) needs to be replaced. The Allen screws (1) are fitted with new anti vibration washers (2) and fixed with Loctite® 243 and then re-installed with a tightening torque of 0.5 Nm.

B C D

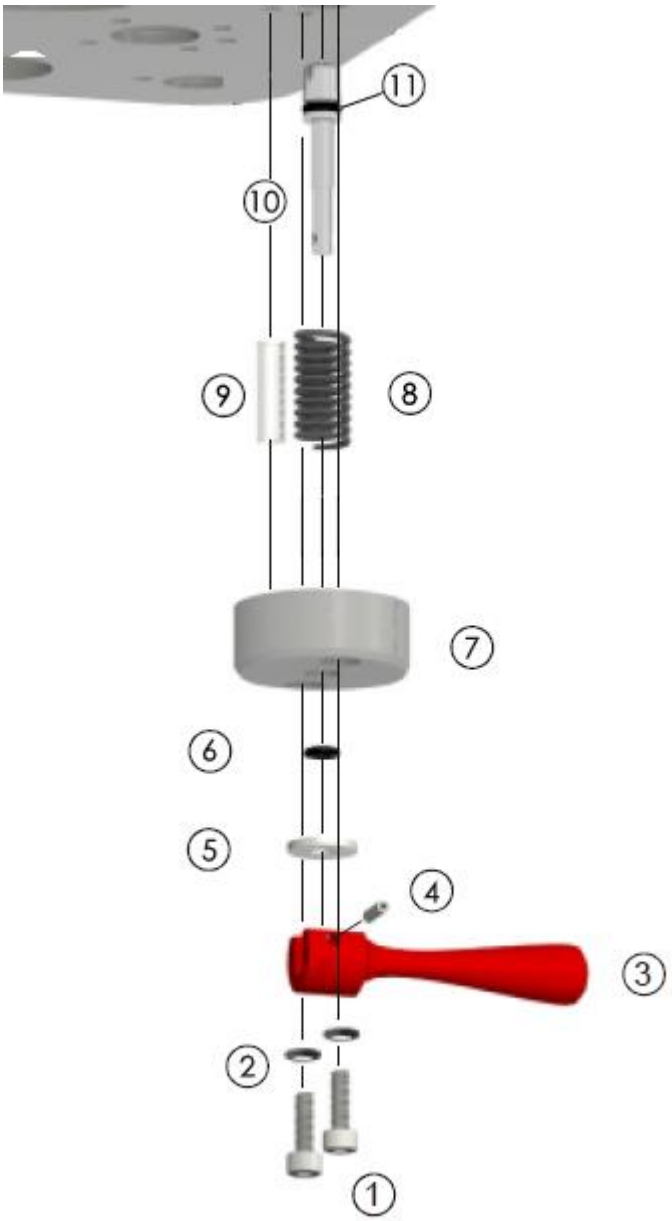

No.	Title
1	Allen screw M4 x 16
2	anti Vibration washer DN4,3
3	operating lever, red
4	pin 2,5x12
5	Nylon washer
6	O-Ring 3,68 x 1,78
7	upper part silent burner
8	coil spring
9	PE-hose 4 x 1
10	valve piston
11	O-Ring 4,47 x 1,78

pic.4-7: Silent-(cow) burner valve unit



To replace the O-rings of the blast valve, remove the handle bar attachment (5) and the handle bar (2) first by removing the Allen screws (3). The operating lever (6) and the stainless steel washer (10) are removed after removal of the grub screw (7). In order to remove the upper body of the blast valve (11), un-screw the four Allen screws (8). Now the upper body of the blast valve and its inner part (18) can be removed from the manifold block as well as the inner part can be removed from the upper body. Then, the O-rings (21), (15), (16) and (12) are replaced with new ones. Apply Teccem Flouronox Paste KL grease to O-ring (21) and technical Vaseline on o-rings (15) and (16). Do not apply grease to O-ring (12).
Now re-insert the inner part (18) into the upper body of the blast valve (11). Place the assembly on the manifold block and install the four Allen screws (8) with a tightening torque of 1.0 Nm.
The four copper gaskets (9) do not need to be replaced. Now re-assemble the stainless steel washer (10) and the operating lever (6). The grub screw (7) is to be cleaned and Loctite® 243 applied prior to installation of the operating lever. Now, the handle bar attachment (5) and the handle bar (2) are re-installed. Loctite® is applied to the attachment screws of the handle bar attachment, then they are tightened with a torque of 1.0 Nm. During that both anti-vibration washers (4) are to be replaced. If the inner part of the upper body of the blast valve (18) is faulty, it needs to be replaced completely. For this only an original part from the manufacturer must be used.

B C D



4.3.10. Removal of take-off burner valve

It is recommended to replace both O-rings (6+11) every one to two years. To remove the take-off burner valve, the two Allen screws (1) are to be removed. Then, the valve can be removed from the manifold block. Remove the old O-ring and clean all sealing surfaces of the valve with silicone remover and a lint free cloth. After that clean with residue free break cleaner. The new O-ring can now be installed and greased with Teccem Flouronox Paste KL. The valve can be inserted into the manifold block. To replace the O-ring (6), remove the pin (4) from the valve piston (10) using a punch. Now, the operating lever (3) and the nylon washer (5) can be removed and the O-ring be replaced. The pin (4) is to be replaced prior to re-assembly. The Allen screws (1) are fitted with new anti-vibration washers (2) and Loctite® 243 is applied. Then the screws are tightened with a torque of 0.5 Nm. The start burner valves of FB 6 manufacturer before 2009 have a smaller stem diameter. These valve upper body are attached to the valve block with M4 cylinder head bolts. These valves are incompatible to FB 7 burners.

B C D

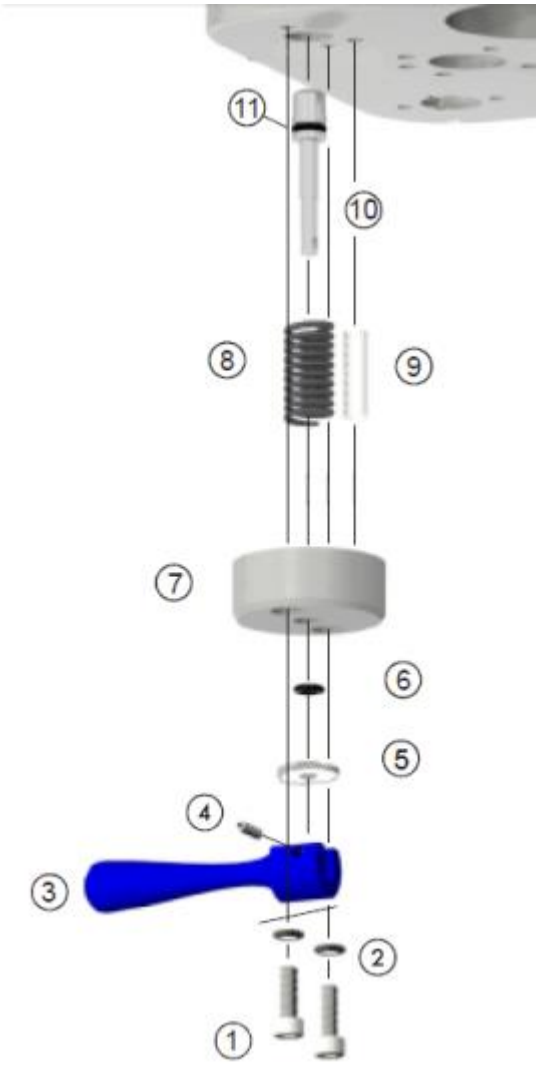

No.	Title
1	Allen screw M4 x 16
2	anti vibration washer DN 4,3
3	operating lever, blue
4	spiral pin 2,5 x 12
5	Nylon washer
6	O-ring 3,68 x 1,78
7	upper body of take-off burner
8	coil spring, small
9	PE-hose 4 x 1
10	valve piston, small
11	O-ring 4,47 x 1,78

pic.4-11: Take-off burner valve assembly



4.4.3. Removal of pilot light valve assembly

It is recommended to replace the O-ring (1) at the annual inspection - but at least every 100 hours. For that, the pilot light valve needs to be removed. The socket cap screws (8) are removed and the entire pilot light valve is then removed from the manifold block. Remove old O-ring. Clean all sealing surfaces of the valve with silicone remover and a lint free cloth. After that clean with residue free break cleaner. The new O-ring can now be installed and greased with Teccem Flouronox Paste KL. The Valve can now be fitted into the manifold block. The socket cap screws (8) are fitted with new anti-vibration washers (7) and fixed with Loctite® 243 and then re-installed with a tightening torque of 1 Nm. If any of the other parts of the pilot light valve are faulty, the entire valve needs to be sent to the manufacturer for repair.

B C D

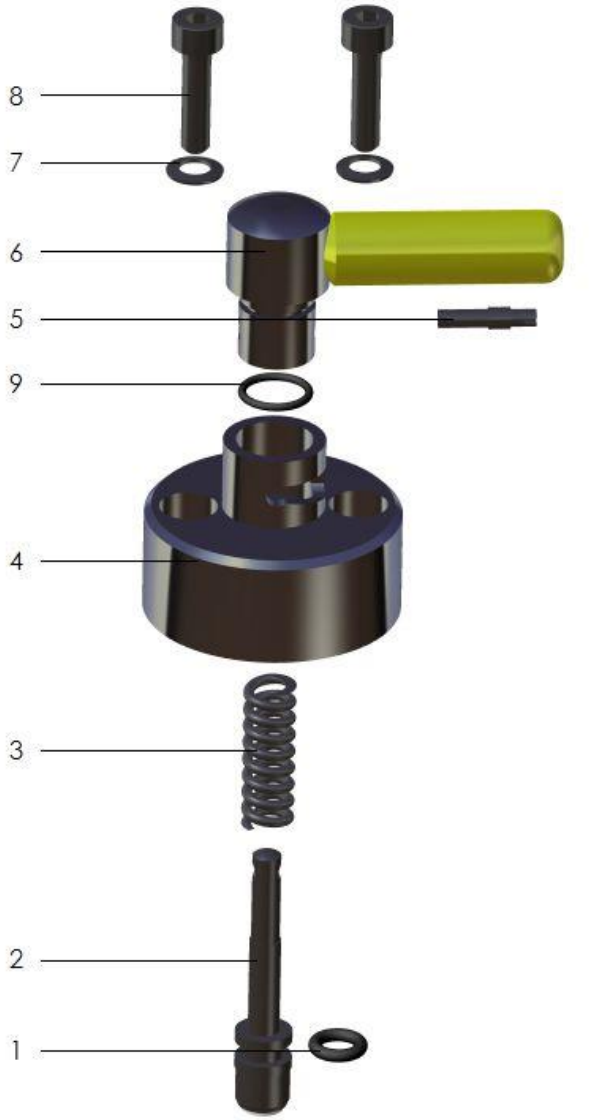

No.	Title
1	O-ring 4,47 x 1,78
2	valve piston
3	pressure coil spring
4	upper body of pilot light
5	grub screw M3 with recess
6	pilot light operating lever
7	anti Vibration washer DN 4,3
8	socket cap screw M4x16
9	O-ring 8 x 1,1

pic.4-17: Pilot light valve assembly



4.4.6. Removal of cow burner valve assembly

It is recommended to replace the O-rings (10+13) every one to two years. To remove the cow burner valve, the valve cap needs to be removed. This can be done by loosening the grub screw (2). Both Allen screws (1) must be removed in the next disassembling step. The valve can now be removed from the manifold block. Remove the old O-ring (13). Clean all sealing surfaces of the valve with silicone remover and a lint free cloth. After that clean with residue free break cleaner. The new O-ring can now be installed and greased with Teccem Flouronox Paste KL. The vlave can now be fitted back into the manifold block. To replace the O-ring (10), the pin (4) needs to be removed from the valve piston (10) using a punch. Following, the operating level (3) and the Nylon washer (7) are removed and the O-ring replaced. For re-assembly, the pin (4) needs to be replaced. The Allen screws (1) are fitted with new anti vibration washers (6) and fixed with Loctite® 243 and then re-installed with a tightening torque of 1 Nm. The last step is to place the cap (1) on the valve with the lever showing in the requested direction and tightening the grub screw (2).

B C D

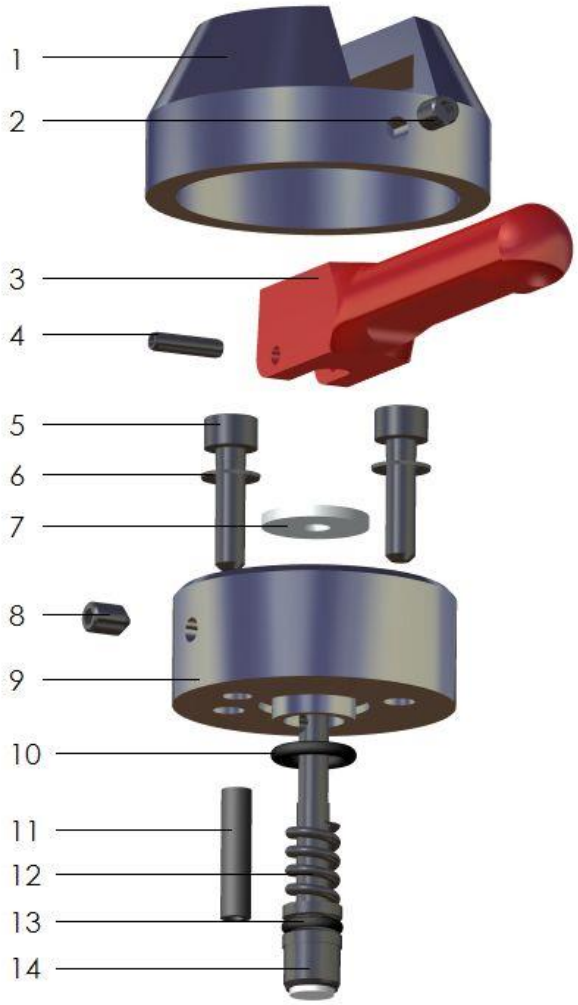

No.	Title
1	valve cap
2	grub screw M4 x 6
3	operating lever, red
4	pin 2,5x12
5	Allen screw DIN 912 M4 x 16
6	anti Vibration washer DN4.3
7	Nylon washer
8	grub screw M4 x 6
9	upper part cow burner
10	o-ring 7,65 x 1,78
11	PE-hose 4 x 1
12	coil spring
13	o-ring 4,47 x 1,78
14	valve piston DN8

pic.4-20: cow burner valve unit

4.4.9. Removal of blast valve

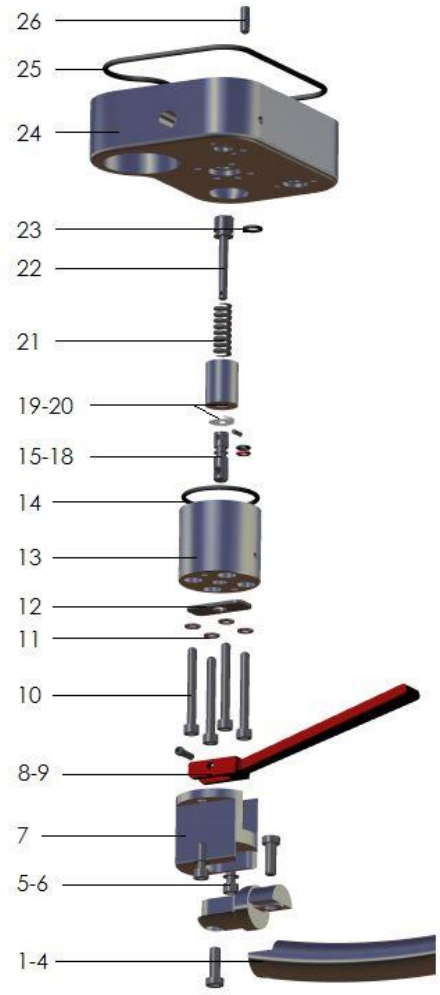

No.	Title
1	handle bar
2	handle bar attachment piece
3	allen screw DIN 912 M6x18
4	allen screw DIN 912 M6x18
5	allen screw DIN 912 M5x16
6	anti vibration washer DN5,3
7	handle bar attachment
8	operation lever
9	grub screw M3 with recess
10	allen screw DIN 912 M5x45
11	copper gasket 5x9x1
12	stainless steel washer
13	blast valve upper body
14	O-ring 38x2,5
15	valve piston Extension
16	pin 2,5x10
17	O-ring Silicon 5x1,5
18	O-ring 5x1,5
19	inner part of blast valve upper body
20	Nylon washer
21	coil spring, DN10
22	Valve piston, DN11
23	O-ring 7,65 x 1,78
24	manifold block
25	O-ring 115x3
26	overflow tube

pic.4-23: blast valve unit

B C D

To replace the O-rings of the blast valve, remove the handle bar attachment (7) and the handle bar (1-4) first by removing the Allen screws (5). The operating lever (8) and the stainless-steel washer (12) are removed after removal of the grub screw. To remove the upper body of the blast valve (13), un-screw the four Allen screws (10). Now the upper body of the blast valve and its inner part (19) can be removed from the manifold block as well as the inner part can be removed from the upper body. Then, the O-rings (17), (18), (23) and (14) are removed. Clean all sealing surfaces of the valve with silicone remover and a lint free cloth. After that clean with residue free break cleaner. Install the new O-rings. Apply technical Vaseline to O-rings (17), (18) and lubricate O-ring (23) with Teccem Flouronox Paste KL. Do not apply grease to O-ring (14).
Now re-insert the inner part (19) into the upper body of the blast valve (13). Place the assembly on the manifold block and install the four Allen screws (10) with a tightening torque of 1.0 Nm.

The four copper gaskets (11) do not need to be replaced. Now re-assemble the stainless steel washer (12) and the operating lever (8). The grub screw (9) is to be cleaned and Loctite® 243 applied prior to installation of the operating lever. Now, the handle bar attachment (7) and the handle bar (1-4) are re-installed. Loctite® is applied to the attachment screws of the handle bar attachment, then they are tightened with a torque of 1.0 Nm. During that both anti-vibration washers (6) are to be replaced. If the inner part of the upper body of the blast valve (19) is faulty, it needs to be replaced completely. For this only an original part from the manufacturer must be used.



4.4.10. Removal of take-off burner valve

It is recommended to replace both O-rings (7+15) every one to two years. To remove the take-off burner valve, the valve cap needs to be removed. This can be done by loosening the grub screw (2). Both allen screws (5) must be removed in the next disassembling step. The valve can now be taken of the manifold block. Remove the old O-ring. Clean all sealing surfaces of the valve with silicone remover and a lint free cloth. After that clean with residue free break cleaner. The new O-ring can now be installed and greased with Teccem Flouronox Paste KL. Insert the valve into the manifold block. To replace the O-ring (7), remove the pin from the valve piston (12) using a punch. Now, the operating lever (3) and the nylon washer (6) can be removed and the O-ring be replaced. The pin is to be replaced prior to re-assembly. The Allen screws (5) are fitted with new anti-vibration washers (4) and Loctite® 243 is applied. Then the screws are tightened with a torque of 1 Nm.

B C D

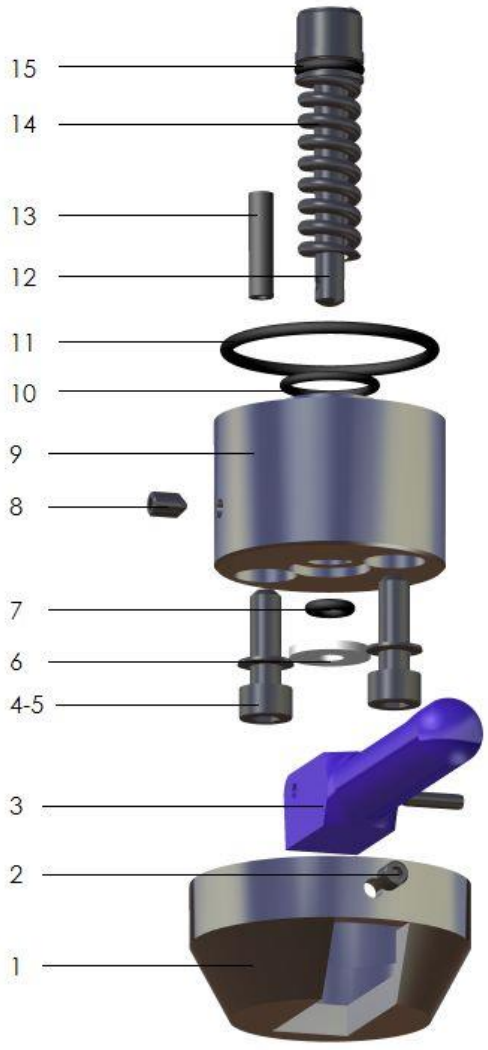

No.	Title
1	valve cap
2	grub screw M4 x 6
3	operating lever with pin 2,5 x 12
4	anti vibration washer DN 4,3
5	allen screw DIN 912 M4 x 16
6	Nylon washer
7	O-ring 3,68 x 1,78
8	grub screwM4 x 6
9	valve upper body
10	O-ring 13 x 1,5
11	O-ring 31 x 2
12	valve piston DN11
13	PE-hose 4 x 1
14	coli spring,DN10
15	O-ring 7,65 x 1,78

pic.4-24: Take-off burner valve assembly