

MAINTENANCE MANUAL

of the manufacturer of hot air balloons

Schroeder fire balloons GmbH

Gewerbegebiet Am Bahnhof 12
D – 54338 Schweich
Deutschland

Phone +49 6502 930-4
Fax +49 6502 930-500

mail@schroederballon.de
www.schroederballon.de

Type Certificate Data Sheet No.: EASA.BA.016 and EASA.BA.010,
Approved as Production Organization ref. DE.21G.0038
Approved as Design Organization ADOAP ref. EASA.AP038
Approved as Continuing Airworthiness Organization ref. DE.CAO.0065

Schweich, 30 June 2021
Date

Signature

Applicability

This maintenance manual is applicable to balloons certified by EASA.BA.016, limited to configurations with burner FB 6, FB 7, and to balloons certified by EASA.BA.010, limited to types Sky Heart, Pig 30, Pig 36 and Sunflower 36 and configurations with burner FB6 and FB 7.

Appendix 1 is applicable to all components no longer in production at Schroeder fire balloons.

List of content

Applicability I

List of content II

Record of Amendments V

List of effective pages VI

1. General 1-1

1.1. Introduction 1-1
1.2. Applicability 1-1
1.3. Amendments 1-1
1.4. Maintenance categories 1-2

2. Airworthiness limitations (EASA approved) 2-1

2.1. Certification basis 2-1
2.2. Inspection intervals 2-1
2.3. Responsible personnel 2-1
2.4. Inspection checks 2-1
2.5. Life time limited parts 2-1
2.6. Minimum fabric strength 2-1

3. Envelope maintenance and repair 3-1



3.1. General information concerning the envelope 3-1
3.1.1. Deflation Systems 3-2
3.1.1.1. Smart Vent 3-2
3.1.1.2. Easy Vent 3-2
3.1.1.3. Para Vent 3-2
3.1.1.4. Lite Vent 3-2
3.1.1.5. Removing the Paraquick – safety device 3-2
3.2. Envelope repair procedures 3-2
3.2.1. Small tears and holes 3-3
3.2.2. Panel repairs 3-4
3.2.3. Repair instructions for Nomex® Fabric 3-7
3.2.4. Repair instructions for vertical- and horizontal load tapes 3-7
3.2.5. Repair and modification of flying wires 3-7
3.2.6. Line repair instructions 3-12
3.3. Procedures following incidents or specific occurrences 3-13
3.4. 100-houres- or annual inspection 3-18
3.4.1. General inspection criteria 3-18
3.4.2. Fault tolerances for assessing airworthiness 3-20

4. Repair and maintenance of the burner 4-1



4.1. General 4-1
4.2. Repair procedures 4-1
4.2.1. General 4-1
4.2.2. Cleaning and care of the burner 4-1
4.3. Constituent parts of the burner FB 6 4-2
4.3.1. Removal of Piezo-ignition unit 4-3
4.3.2. Removal of pilot light assembly 4-4
4.3.3. Removal of pilot light valve assembly 4-5
4.3.4. Replacement of burner coils - take-off burner FB6 4-6
4.3.5. Replacement of burner coils - silent (cow) burner 4-7
4.3.6. Removal of silent (cow) burner valve assembly 4-8
4.3.7. Removal of silent (cow) burner valve 4-9
4.3.8. Removal of pressure gauges 4-10
4.3.9. Removal of blast valve 4-11

4.3.10. Removal of take-off burner valve 4-13
4.3.11. Replacement of burner housing 4-14
4.3.12. Replacement of connection bracket 4-15
4.4. Constituent parts of the burner FB 7 4-17
4.4.1. Removal of Piezo-ignition unit 4-18
4.4.2. Removal of pilot light assembly 4-19
4.4.3. Removal of pilot light valve assembly 4-20
4.4.4. Replacement of burner coils - take-off burner FB 7 4-21
4.4.5. Replacement of FB 7 cow burner coil 4-22
4.4.6. Removal of cow burner valve assembly 4-23
4.4.7. Removal of cow burner jet 4-24
4.4.8. Removal of pressure gauges 4-25
4.4.9. Removal of blast valve 4-26
4.4.10. Removal of take-off burner valve 4-27
4.4.11. Replacement of burner housing 4-28
4.4.12. Replacement of connection bracket 4-29
4.4.13. Replacement of burner hoses 4-31
4.4.14. Procedures following incidents or specific occurrences 4-32
4.5. 100-hours- or annual inspection 4-33
4.5.1. Inspection criteria 4-33
4.5.2. Fault tolerances 4-34

5. Basket maintenance and repair **5-1**



5.1. General 5-1
5.2. Repair procedures 5-2
5.2.1. Basket weave 5-2
5.2.2. Basket floor 5-2
5.2.3. Load bearing wooden frame (basket frame) 5-2
5.2.4. Sliding runner 5-2
5.2.5. Metal frame 5-3
5.2.6. Stainless stelel basket wires 5-3
5.2.7. Basket wire routing 5-3
5.2.8. Basket padding and leather trim of basket top 5-3
5.2.9. Raw hide covering at basket bottom 5-3
5.2.10. Rope handles 5-3
5.2.11. Plastic handles 5-3
5.2.12. Take-off aid and take-off rope 5-4
5.2.13. Quick release system attached to burner frame or envelope karabiners 5-4
5.2.14. Burner support rods 5-5
5.2.15. Cylinder attachments (straps) 5-5
5.3. Procedures following incidents or specific occurrences 5-5
5.4. 100-hours- or annual inspection 5-6
5.4.1. Inspection criteria 5-6
5.4.2. Fault tolerances 5-7

6. Fuel Cylinder repair and maintenance instructions **6-1**



6.1. General 6-1
6.2. Repair procedures 6-2
6.2.1. General 6-2
6.2.2. Replacement of cylinder padding 6-4
6.2.3. Replacement of pressure regulator 6-4
6.2.4. Fill level gauge assembly 6-5
6.2.5. Liquid take-off assembly 6-6
6.2.6. Vapour take-off assembly with pressure regulator System Lorch 6-7
6.2.7. Vapour take-off assembly with pressure regulator System fb type:GR 1 6-8
6.2.8. Ball valve assembly 6-9
6.3. Procedures following incidents or specific occurrences 6-10

6.4. 100-hours or annual inspection 6-11
6.4.1. Inspection criteria 6-11
6.4.2. Fault tolerances 6-12
6.5. 10-years inspection of fuel cylinders VA 50 and VA 70 6-13
6.6. 25-years re-evaluation 6-15

7. Instruments **7-1**



7.1. Installation of Temperature sensors 7-1
7.2. Change of the battery 7-1

8. Checks **8-1**

8.1. General 8-1
8.2. Checklist burner 8-1
8.3. Checklist envelope 8-2
8.4. Checklist basket 8-3
8.5. Checklist Fuel container 8-4
8.6. Checklist Equipment 8-5

Appendix 1 Out of production equipment
Appendix 2 Worthington aluminium cylinders
Appendix 3 Burner valve modification
Appendix 4 FB 7 with liquid pilot light
Appendix 5 Utilization of Ultramagic bottom ends

Record of Amendments

Amendment no.	Affected chapter	Amended pages	Date of issue
0	all	all	October 2011, Chapter 2 EASA-appr.: 10036979
1	4	Pages 4.17 to 4.29 inserted due to new burner FB 7	August 2013; EASA approval #10047030
2	3; appendix 1	3-2; 3-3; 3-12; 3-15; 3-17-18; 3-20; App. 1	May 2019 EASA approval #10070119
3	4; 6	4-5; 4-8; 4-13; 4-20; 4-23; 4-26; 6-13	August 2019 EASA approval #10070719
4	4; 6	4-1; 4-13; 6-4	November 2019 EASA approval# 10071812
5	3	3-7; App. 4, App. 5	May 2020 EASA approval# 10073341
6	5	5-4 to 5-7	June 2020 EASA approval# 10073560
7	2; 3; 4	2-1; 3-1; 3-2; 3-19; 3-20; 4-5; 4-8; 4-12; 4-13; 4-20; 4-23; 4-26; 4-27;	June 2021 EASA Approval nos. 10076828 and 10076830

tab.0-1: Record of Amendments

List of effective pages

Chapter	Page	Date of issue
Cover	0	May 2020
	I	Okt 2011
	II	May 2020
	III	May 2020
	IV	May 2020
	V	May 2020
	VI	May 2020
1	1-1	Okt. 2011
	1-2	Okt. 2011
2	2-1	Jun. 2021
3	3-1	Jun. 2021
	3-2	Jun. 2021
	3-3	Okt. 2011
	3-4	Okt. 2011
	3-5	Okt. 2011
	3-6	Okt. 2011
	3-7	May 2020
	3-8	Okt. 2011
	3-9	Okt. 2011
	3-10	Okt. 2011
	3-11	Okt. 2011
	3-12	May 2019
	3-13	Okt. 2011
	3-14	Okt. 2011
	3-15	May 2019
	3-16	Okt. 2011
	3-17	May 2019
	3-18	May 2019
	3-19	Jun. 2021
	3-20	Jun. 2021
4	4-1	Nov. 2019
	4-2	Okt. 2011
	4-3	Okt. 2011
	4-4	Okt. 2011
	4-5	Jun. 2021
	4-6	Okt. 2011
	4-7	Okt. 2011
	4-8	Jun. 2021
	4-9	Okt. 2011
	4-10	Okt. 2011
	4-11	Okt. 2011
	4-12	Jun. 2021
	4-13	Jun. 2021
	4-14	Okt. 2011
	4-15	Okt. 2011
	4-16	Okt. 2011
	4-17	Aug. 2013
	4-18	Aug. 2013
	4-19	Aug. 2013
	4-20	Jun. 2021
	4-21	Aug. 2013
	4-22	Aug. 2013
	4-23	Jun. 2021
	4-24	Aug. 2013
	4-25	Aug. 2013
	4-26	Jun. 2021
	4-27	Jun. 2021
	4-28	Aug. 2013
	4-29	Aug. 2013
	4-30	Aug. 2013
	4-31	Okt. 2011
	4-32	Okt. 2011
	4-33	Okt. 2011
	4-34	Okt. 2011
	4-35	Okt. 2011
5	5-1	Aug. 2013
	5-2	Okt. 2011
	5-3	Okt. 2011
	5-4	Jun. 2020
	5-5	Jun. 2020
	5-6	Jun. 2020
	5-7	Jun. 2020
6	6-1	Okt. 2011
	6-2	Okt. 2011
	6-3	Okt. 2011
	6-4	Nov. 2019
	6-5	Okt. 2011
	6-6	Okt. 2011
	6-7	Okt. 2011
	6-8	Okt. 2011
	6-9	Okt. 2011
	6-10	Okt. 2011
	6-11	Okt. 2011
	6-12	Okt. 2011
	6-13	Aug. 2019
	6-14	Okt. 2011
	6-15	Aug. 2013
7	7-1	Oct. 2011
8	8-1	Oct. 2011
	8-2	Oct. 2011
	8-3	Oct. 2011
	8-4	Oct. 2011
	8-5	Oct. 2011
App.	1	May 2019
App.	2	Apr. 2015
App.	3	Juni 2017
App.	4	May 2020
App.	5	May 2020

tab.0-2: List of effective pages

1. General

1.1. Introduction

The purpose of this maintenance manual is to provide information to the user on how hot air balloons manufactured by Schroeder fire balloons including their components are to be maintained and repaired The manufacturer is to be contacted, if a maintenance activity or repair is required that is not specified in this maintenance manual. The simplicity and clear arrangement of the components may sometimes disguise, how much know-how, development and experience has been invested into the selection and design of the components. As incorrect execution of repairs or repair activities not specified in this maintenance manual may render the aircraft not airworthy.

"Only original parts from Schroeder fire balloon may be used."

Those parts must to be new or inspected by the manufacturer. The use of different or not approved parts or components may lead to loss of airworthiness. The technical reliability may be dangerously degraded and may also have implication with regards to insurance cover.
The maintenance manual is structured as follows. The constituent components envelope, burner, basket, fuel cylinder and equipment are described in chapter V individually:

- Description of the component and its function
- Repair options
- Procedures following special occurrences
- Inspection criteria
- Fault tolerances

1.2. Applicability

The information in this manual is applicable to all balloons manufactured by Schroeder fire balloons and certified by TCDS EASA.BA.016 and EASA.BA.010.
This issue of the maintenance manual is the current up-to-date version applicable.
For older parts and components not covered by this manual, the previous maintenance manual (issue 1987, revision 18) is applicable as a supplement.
In principle, the latest amendment issue of the maintenance manual is to be used.

1.3. Amendments

This maintenance manual is being kept up-to-date by the manufacturer. Amendments are available on our website www.schroederballon.de

1.4. Maintenance categories A B C D

The personnel permitted to carry-out the maintenance and repair activities, are categorised in categories A to D:

Category **A**	Pilot, if not prohibited by European or national legislation
Category **B**	Person / Organization with nationally recognised permit
Category **C**	Person / Organization with nationally recognised permit and additional training by the manufacturer Schroeder fire balloons
Category **D**	Manufacturer Schroeder fire balloons only

tab.1-1: Maintenance categories

The repair activities specified in the following chapters are assigned to the maintenance categories.

2. Airworthiness limitations (EASA approved)

The chapter 2, Airworthiness limitations is EASA approved.

2.1. Certification basis

This part of the maintenance manual is EASA-approved and specifies the required basis for certification. This maintenance manual is in compliance with requirements CS HB31.

2.2. Inspection intervals

Checks are to be carried-out every 12 months or after 100 operating hours within the scope of a 100-hours-inspection, whichever occurs first.

2.3. Responsible personnel

The inspections are to be performed by a maintenance organization approved by a national Aviation Authority The personnel performing the activities must be qualified appropriately.

2.4. Inspection checks

The results of the annual inspection or 100-hour-inspection respectively are documented in check lists. Check lists are specified in Chapter IV.

2.5. Life time limited parts

When the life of a life-limited part has expired, it must be replaced by a new one. This includes e.g. burner hoses. They are to be replaced after 10 years.

Component	Life limitation	Comment
Burner hoses	10 years from packaging	Date on crimped hose sleeve stamped on the fuel cylinder end
Safety valve of fuel cylinder VA50 and VA70	10 years from installation	See also Chapter 1.1; maximum shelf life of 5 years before installation

tab.2-1: Lifetime limited parts

2.6. Minimum fabric strength

The envelope fabric has no life limitation. Its strength is the limiting factor. The value is 14 daN (14 kp) and equates to the lowest acceptable strength resulting from the grab-test-procedure. This minimum strength must be determined during the airworthiness review at the most critical areas of the envelope and the parachute (view Grab-test 3.4.1). If the fabric strength in these areas is close to the limit, the inspector can specify a premature repetition of the grab test. (e.g. after 50 flight hours). The procedure and the areas that need to be grab tested are defined in Chapter 3.4.1.



3. Envelope maintenance and repair

3.1. General information concerning the envelope

The envelope fabric consists of high-strength and elastic nylon texture with a Polyurethane coating or high-strength Polyester fabric texture with a Polyurethane coating. The tensile strength of a 5 cm wide test sample strip of new envelope fabric is approximately 650 N. Because of the high elasticity of the nylon fabric, which has been used by the manufacturer Schroeder ever since, the envelope can absorb high loads during shock loading e.g. during gusts. The elasticity of new Nylon fabric is more than 30%. The elasticity of new Polyester fabric is approximately 20%A stronger but also heavier nylon fabric with special coating (Thermogrip) and a higher tensile strength of 120 to 130 daN is used in the upper area of the envelope by customer request.
The life of the envelope is impaired mainly by high temperatures, UV radiation and storage in humid conditions. Especially elevated temperatures and simultaneous high UV radiation accelerate the ageing of the envelope. Therefore, Schroeder fire balloons is limiting the temperature in the envelope in continuous operation to 110 °C.
The actual fabric temperature however is lower due to cooling from the outside, by up to 20 °C depending on the ambient temperature. This needs to be taken into account especially when measuring the surface temperature using infra-red devices, which is why they are not recommended by Schroeder fire balloons. The more porous the coating, the more hot air is flowing through the fabric and is increasing therefore its temperature.
The temperature gradients between fabric temperature and the temperature inside the envelope are also dependent from the colour. The area of the envelope around the edge of the parachute and around the turning vents is especially stressed by temperature, as the boundary* layer is disturbed by the air flow. The highest stress is in the upper third of the envelope. There, the temperature and the UV-radiation is the highest at the same time, so that this area is ageing the fastest. This makes it necessary to observe this section especially. This needs to be taken in consideration due to the fact that the ageing process is strongly dependent from the colour. The pressure inside the envelope is increasing continuously from the bottom opening 0 Pa (0 mbar) to the top of approximately 92 Pa (0,92 mbar) depending on balloon height and temperature difference.
It must be taken into consideration especially for older balloons with a high number of operating hours, that the fabric of an envelope of 7000 m3 is subject to approximately twice the stress as an envelope of 3000 m^3.
A dry environment is recommended for the storage the envelope. A moist envelope should be dried as soon as possible and as careful as possible. Already after a few days, mould may develop depending on temperature and the number of mould spores present. Moist envelope fabric may develop after a few days mould stains. During this, the coating will be damaged permanently by mould and bacteria.
There are different possibilities to dry a balloon. The process should be as careful as possible. It is not recommended e.g. to inflate the balloon, load the balloon heavily and to immediately heat it with excessive temperature. This alone would not carry the moisture out of the balloon. Although the hot air absorbs a lot of moisture but this air remains inside the envelope. It is therefore recommended to vent the balloon for a while using the inflation fan and only after that to inflate the balloon with warm air with temperature below 80 °C. Subsequently, open the parachute now and then so that the dissolved moisture can escape. The envelope is only, when all load tapes are free of moisture. It may as well be required to spread-out the envelope in a vented room for a while. If the crown line is still moist, it must remain outside the envelope sack. Otherwise large sections of the envelope coating will be damaged.

* - the boundary layer is an insulating layer of air, which forms on the inside of the envelope in undisturbed condition. If air flow is generated (e.g. by operating the parachute) this layer is disturbed and loses its insulating characteristics. It re-forms anew when the air flow stops.



Load tapes that have not been dried properly can be detected later on the mould formation (dark spots). The fabric adjacent to these load tapes may also be infested with mould.
The process takes respectively longer in a hall or hangar if the envelope cannot be dried outside due to adverse weather. The higher the difference between hangar temperature and the outside temperature is and the better the venting, the faster the envelope will dry. For that it is necessary to turn the envelope fabric a number of times. The less chemical substances are coming into contact with the envelope, e.g. fertilised soil at take-off or landing, the better for the life of the balloon

3.1.1. Deflation Systems

There are different deflation systems available for Schroeder fire balloons envelopes. The availability depends on the volume of the envelope. Already existing envelopes can only be equipped with a different deflation system by manufacturer. The different Systems will be briefly described in the following paragraphs. Line and Parachute repairs are described in this chapter. The desciptions apply to all systems.

3.1.1.1. Smart Vent

The Smart Vent is a fast deflation system with a red and a red-white control cord. The function of these cords is comparable to the Paraquicksystem. The function is described in the Flight Manual. The Smart Vent is available for envelopes with a volume of 3000 m³ and bigger (3000m³ included).

3.1.1.2. Easy Vent

The Easy Vent is equipped with a white and a red control cord. The red Parachute line is used for ventilation during flight and for landing close to the ground. The white line is used for closing the Parachute. The white line is equipped with a weight next to the pulley. It weights approximately 4 kg and causes a constant pulling force to the parachute edges. The Easy Vent can be used for envelopes with a volume up to 2600 m³ (2600m³ included).

3.1.1.3. Para Vent

The Para Vent is a slightly modified Parachute System with a red-white control cord. There is no difference in operation compared to the Parachute System. The Para Vent can be used for envelopes with a volume up to 2600 m³ (2600m³ included).

3.1.1.4. Lite Vent

The Lite Vent is a fast deflation system for balloons with a volume starting from 6000 m³. The system is equipped with 3 lines to actuate the parachute. The operating instructions can be found in the flight manual.

3.1.1.5. Removing the Paraquick – safety device

The Paraquick safety device can be removed or installed to the Paraquick system on demand by the operator. This change must be noted and released to service in the aircraft logbook. In order to remove the Paraquick saftey device, the shrink hose attached to the end of the red line must carefully be heated up with a handheld hot air fan to make it soft. The shrink hose can now be cut open with scissors along the red line without damaging the line. The karabiner and the Paraquick safety device can be removed from the red line. The karabiner must be attached to the red line again, using a 10 cm long piece of shrink hose containing a hot glue layer inside.

3.2. Envelope repair procedures

B C D

For damages to the envelope fabric as well as to the load tapes, it is to be distinguished between areas of the lower and of the upper section of the envelope. Damages of any kind in the upper area must be considered more critical then damages in the lower area. A Polyester envelope can be repaired with Nylon fabric in isolated places. This is not possible vice versa.
(See also Chapter 3.3 Procedures following incidents or specific occurrences)



3.2.1. Small tears and holes

Small fabric tears and holes in the lower section can be repaired easily. The damaged fabric is to be spread on an even surface and 5 cm wide adhesive tape is to be applied on both sides. Care should be taken that the fabric remains crease-free. The same is applicable for repairs in the upper section but in addition, the adhesive patches are to be sewn-in circumferentially. For larger tears, a self-adhesive fabric is used instead of tape. This is applied on one side of the envelope and circumferentially sewn-in.

(See tab.3-4: , on page 3-16 and tab.3-5: , on page 3-17)

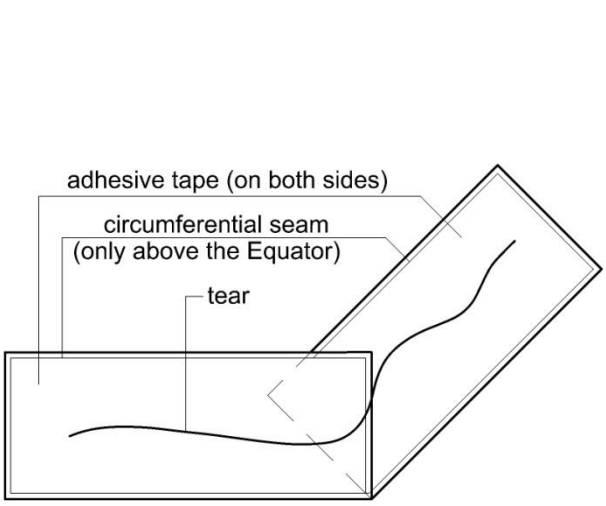

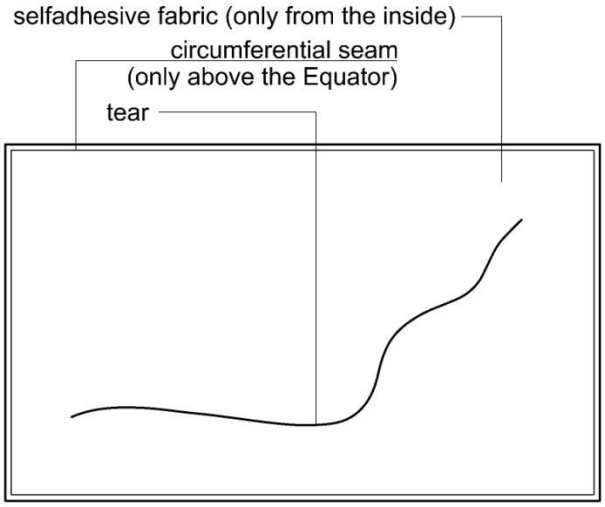

pic.3.1. Repair using adhesive tape
pic.3.2. Repair using self adhesive fabric



3.2.2. Panel repairs

A panel repair must be carried-out for larger damages by partly of fully replacing a section.
This repair must only be performed by competent personnel. The same envelope fabric and the yarn used by the manufacturer (Serafil 40 or Serafil 20) are to be used for the sewing. The length of the stitches should be 2 - 4 mm. The seams are to be made in that way that the fabric inserted on both sides is sewn-in as illustrated below.

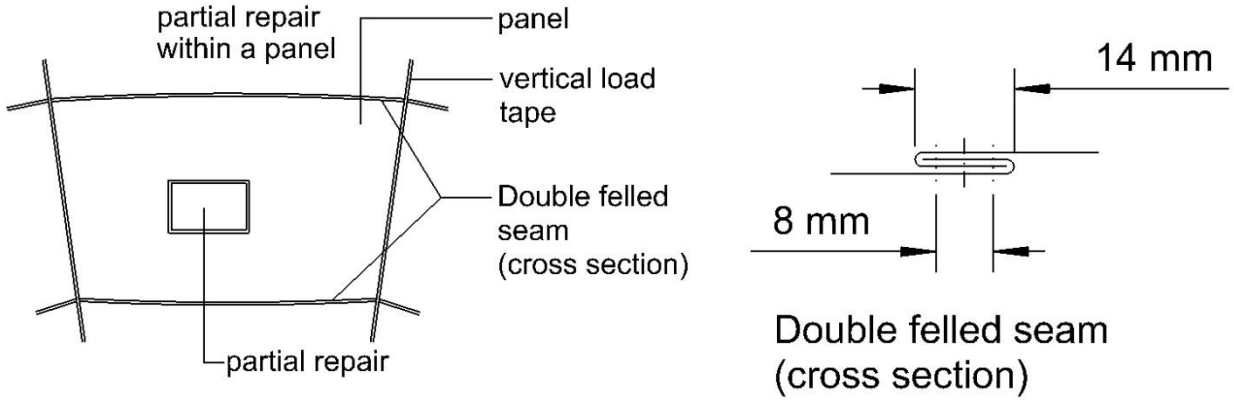

pic.3.3. Partial repair within the panel

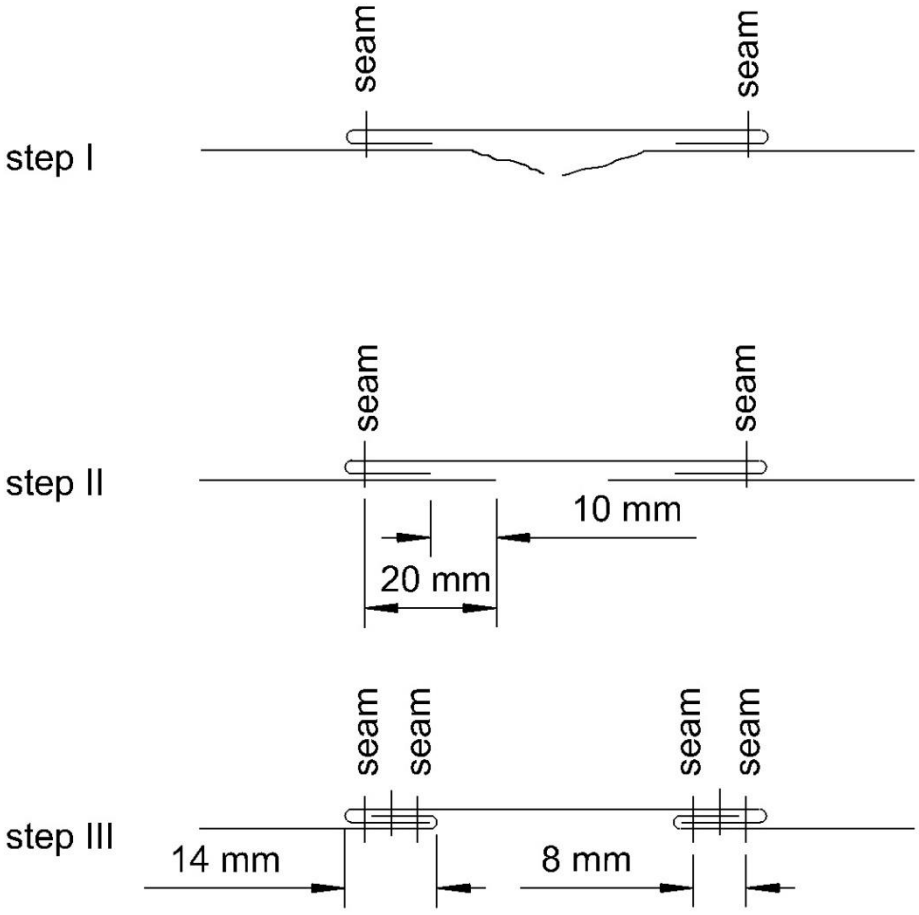

pic.3.4. Important steps of a panel repair



If holes or tears are too large to be repaired using tape or self-adhesive fabric, a panel repair is to be performed as a section repair.

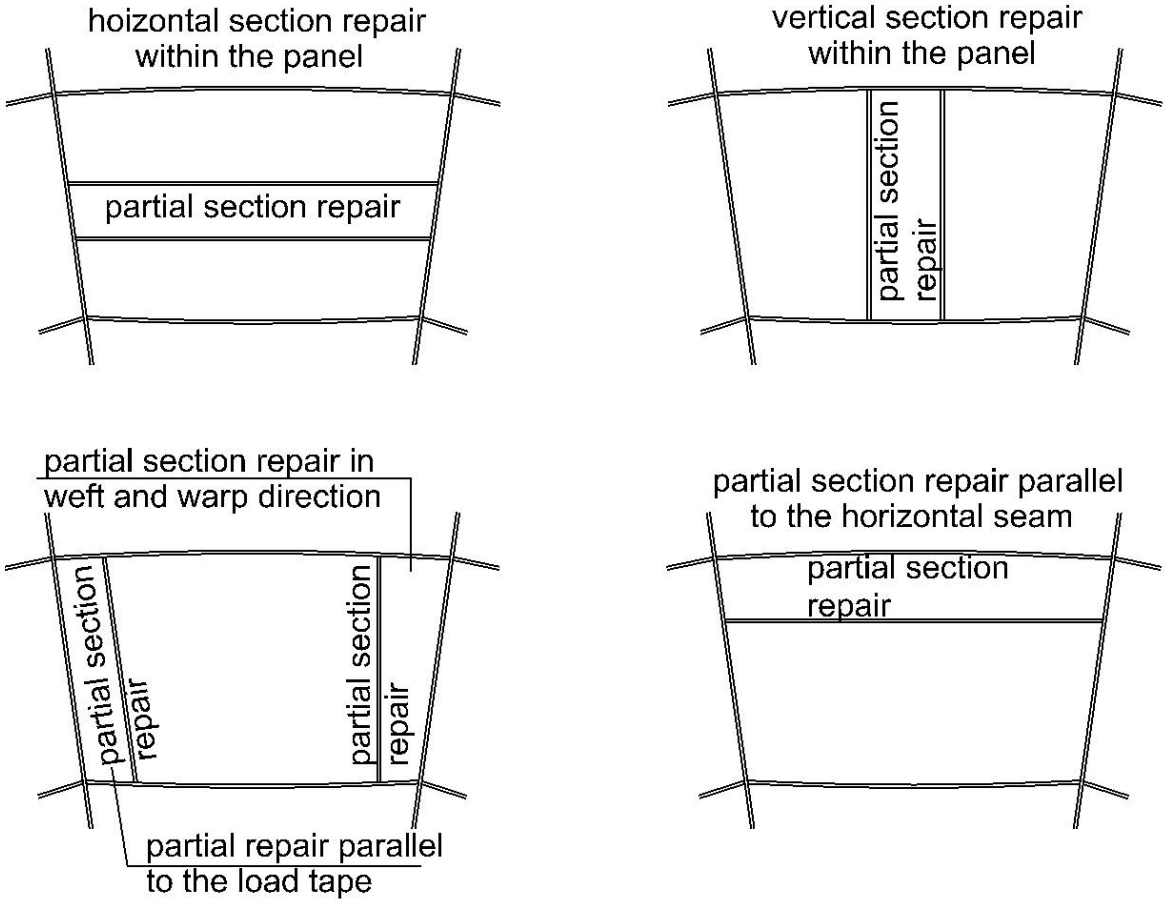

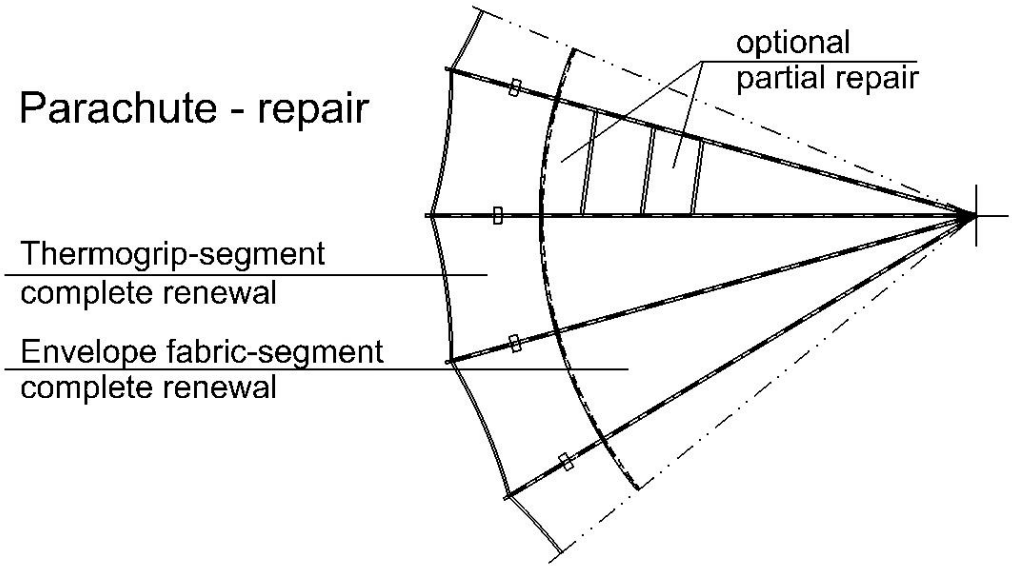

pic.3.5. Applicable partial section repairs



The repair of a partial section within a panel (chapter 3.2.2) is not recommended as this type of repair is very labour intensive. Furthermore, creases often develop at the four corners of the fabric patch which is detriment to appearance. It is therefore recommended, depending upon the direction of the tear, to perform a horizontal or vertical partial section repair respectively within the panel (pic.3.5). Repairs are carried-out in parallel to the load tape or horizontal seam respectively (centre illustrations, pic.3.5), if the damages are located at the edge of a section

At a repair on the parachute, a partial section repair or a complete replacement of the affected section can be carried-out depending upon the size of the damage. The replacement of the entire panel is recommended (pic.3.5 bottom).

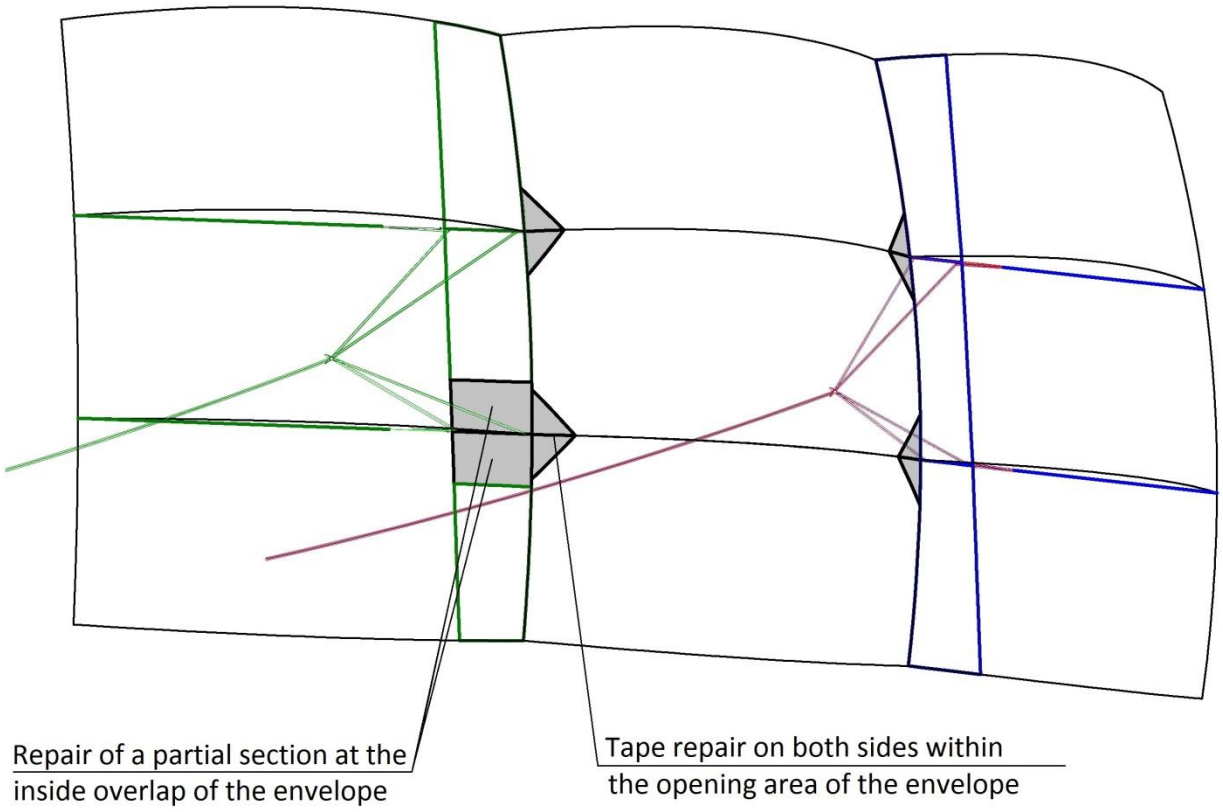

pic.3.6. Turning vent repair / reinforcement

By operating the turning vents, the opening section is subject to higher thermal stresses due to the flow of hot air. This is causing the quality if the fabric to deteriorate faster. In this case, the affected section must be reinforced using tape on both sides. If the inside overlapping sections are affected, a replacement or section repair of the overlap area of the entire section is required as illustrated.



If repairs of partial sections are not possible due to the size of the damage, the entire panel must be replaced. This requires the removal of the entire panel to the bordering seams. If the panel is adjacent to a horizontal or vertical load tape, the load tape is to be unstitched and the replacement panel is to be sewn-in together with the neighbouring panel using the double felled seam. Following that, the tape is to be re-sewn on top using the same yarn and the same lengths of stitches.

3.2.3. Repair instructions for Nomex® Fabric

If the scoop or the lower Nomex® gore of the envelope is damaged, the damaged area can be repaired. For this, Nomex® thread is to be used for sewing. The scoop or the Nomex® section is to be replaced if the damage is too large.

3.2.4. Repair instructions for vertical- and horizontal load tapes

Vertical load tapes

A load tape of the same quality is to be used for the repair.
There are two types of load tape repairs:

1) If the load tape is torn or cut, an additional load tape of equal quality is placed on top. The minimum overlap on both sides must be 40 cm. The new load tape is to be sewn-on in parallel. The box section may be made as a cross box section or as a two-needle-box section (pic.3.7 and pic.3.8)

2) If the load tape needs to be replaced because it has been burnt or ripped, the repair must be by load tape overlapping. The new load tape of equal quality is placed on top of the old one with a minimum overlap of 40 cm. The box section is made as in repair type 1) as a cross box section or as a two-needle-box-section (pic.3.7)

3.2.5. Repair and modification of flying wires

If an existing Schroeder fire balloons envelope is combined with a bottom end of a different manufacturer, the flying wires of the envelope must be replaced. The lengths of the flying wires must be adapted to the pick-up point geometries of the burner frame. This modification must be conducted in order not to overload the corresponding parts of the envelope. The change will be release to service in the aircraft log book.

D

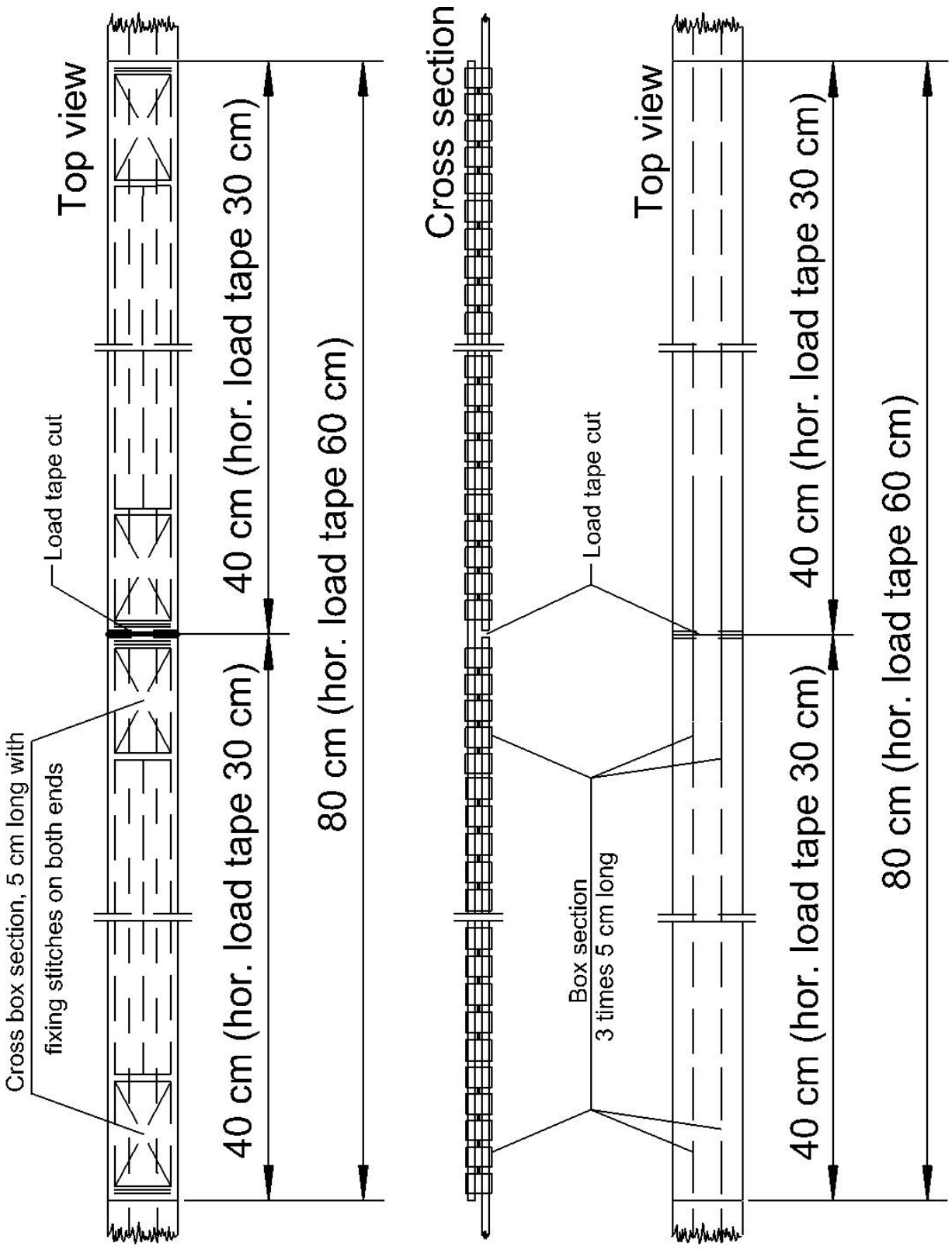

pic.3.7. Re-joining of damaged or torn horizontal or vertical load tapes

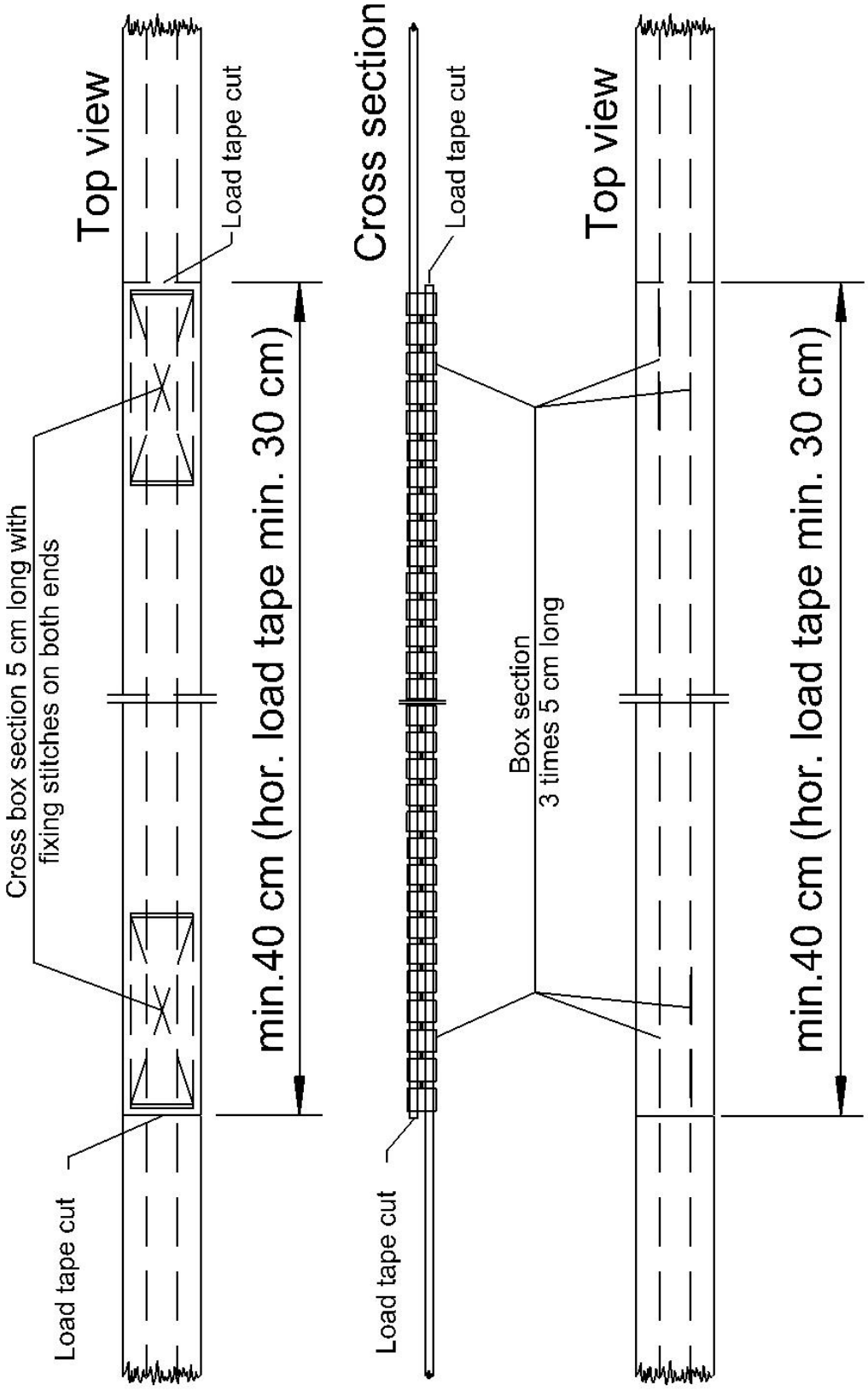

pic.3.8. Re-joining of damaged or torn horizontal or vertical load tapes

Horizontal load tapes are repaired as vertical load tapes but an overlap of 30 cm is sufficient (pic.3.8).



Vertical load tapes attached to crown ring

If a load tape on the crown ring is torn, a new section of load tape of equal quality is added running around the crown ring with an overlap on both sides of 30 cm minimum and secured by a box section. The torn section is cut off just short of the old existing box section seam (pic.3.9).

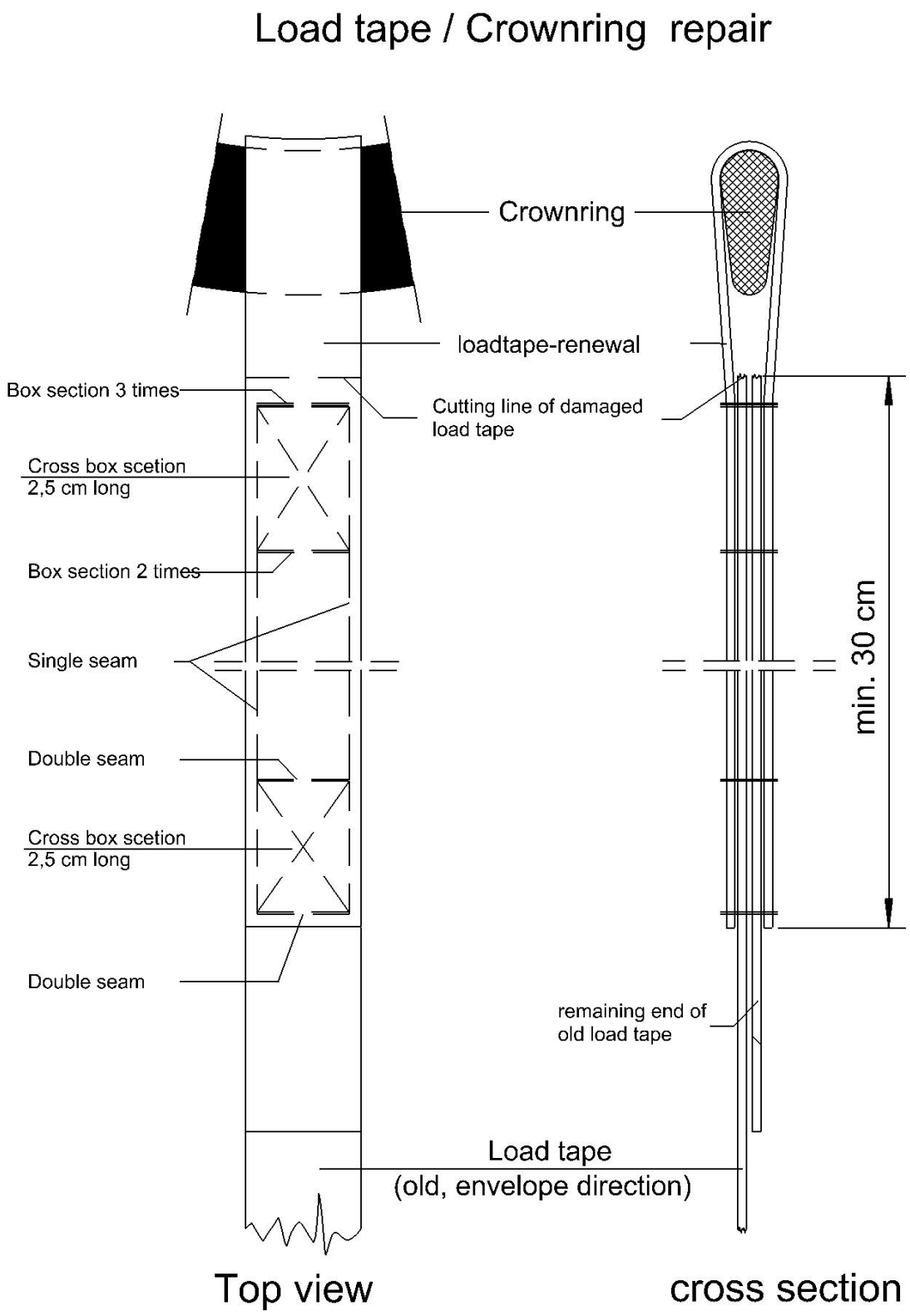

pic.3.9. Load tape repair on the crown ring



Load tape box section in the Nomex® section

The sewing of the load tape box section in the Nomex® area is illustrated (pic.3.10). Load tapes can be attached optionally on the inside or outside. The load tape overlap is 50 cm.

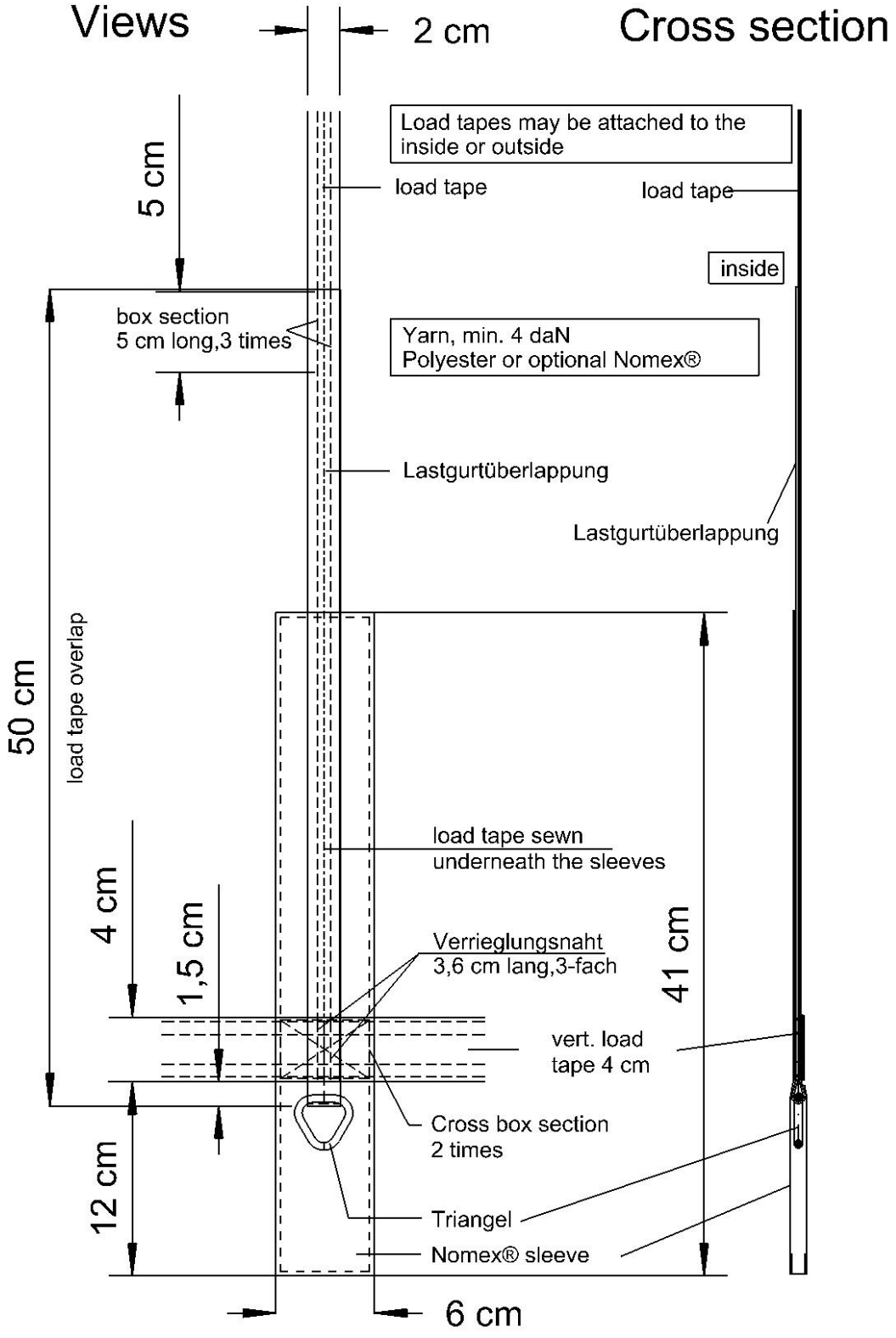

pic.3.10. Assembly of the mouth end of the envelope



3.2.6. Line repair instructions

Parachute-line

If the parachute line is damaged, it is either repaired or completely replaced depending on severity and location of the damage. Care is to be taken that no knot is hindering the free run of the line. Is the parachute line damaged on the pilot-operated end of the line (not more than 5 m), the valve line can be untied on the opposite end at the fixing point and extended up to a maximum of 5 m. The extension is done by tying as shown in the picture of the knot (bowline knot). The location is subsequently fixed using shrink sleeve.



pic.3.11. bowline-knot

Is the parachute-line damaged at a location at which the line cannot be extended (e.g. in the vicinity of a pulley), it must be completely replaced.

Centralising lines and shroud lines (Parachute)

Individual damaged lines are always to be completely replaced.

Operating lines of the fast deflation systems

Repairs on the operating lines of the fast deflation system are to be carried out as for the parachute line if the damages are located outside of the sections of the pulley action. It is to be ensured that no knot is hindering the free run of the line. If a repair is no longer possible, the damaged operating line is to be completely replaced.

Lines of the fast deflation system "Paraquick"

Individual damaged lines are always to be completely replaced.

Turning vent lines

A turning vent line damaged outside of the section of the pulley action may be repaired the same way as a parachute line. It is to be ensured that no knot is hindering the free run of the line. If the area to be repaired is within the section of the pulley action or if a repair is no longer possible, the turning vent line is to be completely replaced.

Crown line

A damaged crown line is to be replaced in any case.



3.3. Procedures following incidents or specific occurrences

Type of occurrence	Actions
Overheated envelope	A grab-test is recommended after the internal temperature reached momentarily 135 °C. **B C D** A grab test is required after exceeding the balloon internal temperature of 140 °C. The possible damage depends on exposure time and level of temperature. **B C D**
Wet envelope	The balloon must be dried as per section 1.1 General. Before next take-off, inspect sealing of parachute. Changes in length of lines or tapes may have occurred. In this case the fuel consumption would be increased. The probability is not high as the tapes and lines used by the manufacturer Schroeder are pre-treated accordingly. **A B C D**
Tears caused by spreading-out the envelope during inflation procedure or Tears caused by no interference with foreign obstacles e.g. due to wind shear or gusts	This may occur at older balloons. It indicates marginal strength of the fabric. The envelope must be inspected, a grab test is required. **B C D**
Sudden unusually high fuel consumption	This may be caused by a parachute or turning vent not sealing properly. Porosity would not cause the sudden occurrence of the problem. Inspect routing of parachute lines, centralising lines or load tapes respectively. **C D**

tab.3-1: Procedures following incidents or specific occurrences



Type of occurrence	Actions
Contact of flying wires with power lines	At voltages higher than 400 V, replacement of damaged or discoloured steel wires. Inspection of flexibility of the remaining wires. At higher voltages, all flying wired must be replaced. An inspection of the basket wires is required. B C D
Mould on tapes or fabric	Observe fuel consumption if in doubt enquire with maintenance organisation or manufacturer. A B C D
Fire damage of tears on load tapes	Repair required prior to next take-off. B C D
Flying wires that came into contact with flames	Replace affected flying wire when significantly discoloured or by loss of flexibility. B C D
Kinked flying wire	During take-off or landing, flying wires may be caught by obstacles of the burner and subsequently damaged. An individual flying wire with a slightly permanent deformation is acceptable. Strong or minor deformation of more than one wire requires replacement Flying wires that have been caught-up by the prop of the inflation fan are usually unusable. If in doubt, ask a maintenance organisation. B C D
Damaged parachute line	Repair according to extent and location of damage. B C D Complete replacement A B C D

tab.3-2: Procedures following incidents or specific occurrences



Type of occurrence	Actions
Damaged operating lines of the fats deflation system	Repair or replacement depending on location of damage. In any case, a knot must not hinder the free run of the line. **C D**
Pulley running too tight or damaged e.g. signs of abrasion or wear	This only occurs when thread are pulled in. This can be carried out by the owner/pilot if the pulley does not show any signs of abrasion or wear. **A B C D** Otherwise replacement. **B C D**
Loose tapes near pulleys or at the crown ring	Re-sewing prior to next start **B C D**
Damages to centralising and shroud lines of a parachute	Replacement **B C D**
Damaged turning vent lines	Repair or replace. In any case, a knot must not hinder the free run of the line. **A B C D**
Damages to lines of the fast deflation systems, except operating line	Replacement of the affected lines required **D**
Fast deflation system not sealing	Inspection and adjustment. **D**
Damages to crown line	Replacement **A B C D**
Damages to scoop and the lower Nomex® section of the envelope	Repair (Nomex® thread) or replacement. **A B C D**

tab.3-3: Procedures following incidents or specific occurrences



Type of occurrence	Actions
Tears or holes in the first three panels above the Nomex®-section or holes as long as no tape is damaged Individual damages must not exceed 30% of section. Not more than 10 repair locations	Repair as per section 'repair instructions A B C D
Up to five tears per panel in the first three panels above the Nomex®-section with a maximum length of 10 cm without directional change.	Repair with adhesive tape with or without sewing. A B C D
Tears in the first three panels above the Nomex®-section with a maximum length of 30 cm, in not more than 3 repair locations.	Repair by sewing as per section repair instructions or repair with adhesive tape with additional sewing. A B C D
Not more than 15 repair locations per panel above the third panel above the Nomex®-section, holes of an area of 3 cm^2 each and with a maximum length of 2 cm on any side.	Repair with sewing or adhesive tape on both sides and subsequent sewing. No adhesive tape to be used with silicone-coated fabrics (Thermogrip) A B C D
Not more than 10 holes or tears of any size per panel in silicone-coated Thermogrip fabric with a maximum of 3 cm2 area each and with a maximum length of 2 cm on any side.	Repair by sewing only, no adhesive tapes! Cutting-out of repair fabric with a hot knife or fold back on itself on all sides to avoid fraying, and subsequent sewing. A B C D
More than 10 repair locations of more than 30% each of a section, excluding Nomex® fabric	Repair as per panel repair instructions. B C D

tab.3-4: Procedures following incidents or specific occurrences



Type of occurrence	Actions
More than 40% of the envelope surface damaged	Repair as per panel repair instructions The entire balloon must consist of at least 60% fabric surface installed by the manufacturer Schroeder fire balloons in order to retain the characteristics of the type design. D
Holes larger than 3 cm^2 in reinforced silicone-coated fabric Thermogrip	Replacement of an entire panel or sewing-on of a repair patch of equivalent material No adhesive tapes! Cutting repair fabric using a hot knife or folding-in all sides to avoid fraying of the fabric. B C D
Fabric damages on turning vents	Repair as per section repair instruction. B C D
Parachute not airworthy	Repair or replacement. B C D
Fast deflation systems not airworthy	Repair or replacement. D
Lack of adhesion of Velcro®-taps	Replacement with original Velcro®-taps by sewing them on. A B C D
Completion of further 100 operating hours and annual inspections	Grab-test. The grab test is not required below 200 operating hours if the balloon is not older than two years. B C D

tab.3-5: Procedures following incidents or specific occurrences



3.4. 100-houres- or annual inspection

3.4.1. General inspection criteria

The following checks are required every 12 months or after 100 operating hours within the scope of the 100-hours inspection, whichever occurs first.

To be inspected:

Scoop:
- inspect attachments for load frame and envelope; tears and holes

Fabric damages:
- inspect for holes, tears, tensile strength (see grab-test) and porosity

Grab-test:
- A grab test is recommended when internal temperature of 135 °C has been exceeded (see 1.4.1.2)

Top line:
- inspect for damages, loops and knots

Registration/flag:
- check for existence and correctness

Type plate on envelope mouth (fire-proof):
- check for existence and correct data

Karabiners:
- Are all karabiners free of damage and free of rust?

Flying wires:
- Inspect wires for kinks, flexibility and overheating.

Maximum temperature as per indicator:
- Record indicated temperature; if the temperature is exceeding the one stated in the data sheet, replace temperature indicator and perform Grab-Test procedure.

Crown ring:
- Inspect for corrosion and damages

Load tapes attached to the crown ring:
- Inspect for correct seams and damages

Load tapes attached to flying wires:
- Inspect for correct seams and damages

Load tapes (seams and load tape joints):
- Inspect for correct seams and damages

Deflation system Standard Parachute:
- Inspect for working Velcro®-taps, attachment of the line system, fabric quality (discolouration, tensile strength)

Lines (burn damage, areas of chafing, knots): see **Fehler! Verweisquelle konnte nicht gefunden werden.**

Pulleys, rings, return pulleys:
- Inspect correct attachment and ease of operation

Velcro®-taps (on envelope and parachute):
- Inspect for good bonding

Combination and fast deflation system: (Paraquick):
- Inspect for working Velcro®-taps, attachment of the line system, fabric quality (discolouration, tensile strength)

Attachments to load tape structure:
- Inspect seams and knots

Turning vents:
- Inspect operating lines for correct installation and knots. Inspect fabric for discolouration and tensile strength



Grab –Test procedure

The grab test procedure is carried-out on the balloon fabric without removal of a test sample from the envelope. The clamping blocks are to be fitted with soft protectors to avoid tearing the fabric. The clamping area is 25 x 25 mm and the distance between the clamping blocks is 75 mm. The test is to be carried-out at 20° C ambient temperature using continuous increase of the spring loading without acceleration. Any acceleration means an increase and corruption of the spring load. Repaired areas are excluded from the test. The fabric used for the repair is usually a lot stronger and not representative due to fewer operating hours. The tests must be executed in the areas of maximum tensile stress. This area of the Parachute starts at a distance of 0,75 m from the Parachute edge to the centre of the Parachute. The area of maximum tensile stress of the envelope depends on the envelope size and is located in the following panels:

Envelope Volumes	**Panel for fabric testing**
1200 m³ – 1800 m³	panel 4 counted from top edge down
2000 m³ – 2600 m³	panel 5 counted from top edge down
3000 m³ – 4500 m³	panel 6 counted from top edge down
5000 m³ – 7000 m³	panel 7 counted from top edge down
8500 m³ + 10500 m³	panel 8 counted from top edge down
12500 m³	panel 9 counted from top edge down

All different colours and fabric types must be tested in this height of the envelope. The test must be performed in vertical und horizontal direction and also in a distance of approximately 15 cm to a seam of an adjacent upper or lower panel.

If the fabric tears at 14 daN (14 kp), the test needs to be repeated in at least 5 different locations. If there are no other failures, the damaged section may be repaired. In this case, it is recommended to impose a limitation to further operating hours to e.g. 50 hours, after which the grab test is to be repeated. The inspector needs to make a judgement in borderline cases which if any limitations are imposed. The inspector needs to take the overall condition of the balloon into account based on his experience and furthermore needs to consider the size of the balloon (a volume of 7000 m³ translates into approximately twice the stress than for a balloon with a volume of 3000 m³).



pic.3.12. Grab-Test procedure



3.4.2. Fault tolerances for assessing airworthiness

Type of fault	Tolerance
Tears or burn damage on the Nomex®-scoop	Max 5% of the surface, repair as soon as possible
Any damage on horizontal or vertical load tapes	None
porosity	No exact limits. If in doubt, the inspector may mandate a test flight to establish that the balloon can be operated safely. It is required that the balloon can be flown with full loading for one hour and needs to retain a fuel reserve of 30 minutes after landing
Strength of envelope fabric	The fabric grab tests must obtain a tensile strength of 14 daN for the panels listed in 3.4.1. The grab test procedure is described in 3.4.1. In borderline cases, the inspector may impose a repeat of the grab test ahead of schedule (e.g. after 50 further hours). Also refer to section 'Grab-Test procedure'.
Strength of parachute fabric	The parachute grab tests must obtain a tensile strength of 14 daN in every colour and every fabric type starting at a distance of 0,75m to the edge of the parachute going towards the centre.
Stainless steel flying wires	No significant damages are acceptable. A maximum of 5 strands may be damaged. All vertical load tape loops on the envelope must be free of damage. If discolouration of a flying wire is present, check its flexibility. Only a slight kink in only one of the flying wires is acceptable. If in doubt, contact maintenance organisation.
Parachute line	None, except marginal impairment due to heat, if the Kevlar®-core is not yet visible.
Triangles connecting flying wires with envelope	None
Karabiners of all lines (Parachute fast deflation system, turning vents)	None
Line pulleys	None
All lines in the balloon including knots	None
All attachment points of lines in the balloon	None
Wires and temperature gauge	None
Velcro®-taps of parachute or fast deflation system	The Velcro®-taps must not open during inflation in wind conditions with surface winds of up to 10 knots.

tab.3-6: Fault tolerances for assessing airworthiness



4. Repair and maintenance of the burner

4.1. General

The burner must be handled with utmost care in every aspect. Individual parts are subject to high stresses due to the extremely high heat output. Therefore, a regular service and maintenance regime is imperative. Only original parts must be used (e.g. because of the quality of the rubber used for O-rings for example). The valves of the FB 6 are comparable to the valves of the FB 7. Exemptions to this are the greater main burner valve of the FB 7 and FB 6 start burner valves manufactured before 2009. The greater main burner valve can be identified by the grub screw on the circumference of the valve upper body. This screw is located on the side and not directly underneath the burner handle. For question to the compatibility of valves please contact the manufacturer.

Among others, the following sources of danger may occur:

Leaks due to faulty seals
Pilot light failure due to blockages or incorrect setting of the regulator
Decreased power output due to contamination of the fuel system, especially burner jets
Leaks due to faulty burner coil
Leaks due to ageing or faulty hoses and couplings
Piezo-igniter failure caused by rotation of the ignition electrode or other fault

4.2. Repair procedures

4.2.1. General

Utmost cleanliness is to be ensured during any repairs of fuel system related parts. Only original parts must be used. This is also applicable to seals. When Teflon® tape is applied it is always to be wound counter to the direction of the thread. The very first turn of the thread is to remain free of sealing tape. 5 to 7 layers of 0.1 mm Teflon® tape, certified by DVGW (German Technical & Scientific Association for Gas & Water) are recommended.
When applying thread locking compound (Loctite® 243 or 270, depending on application), take care not to use too much so that the fittings are not contaminated. After every repair, the fuel system is to be subjected to a pressure test of 1 MPa (10 bar) prior to testing the burner.
If in doubt how to carry-out repairs, always contact the manufacturer.

4.2.2. Cleaning and care of the burner

Modern burners, which produce a low noise level due to their number of jets, tend to soot more than burners of older design with few individual jets.
Because of that the burner should be cleaned now and then. The burner coil maybe cleaned and polished using a fleece cloth. The parts of the housing body may be cleaned using general use cleanser (e.g. scouring cream cleaner, no aggressive agents are to be used as e.g. oven spray). The jet ring may be cleaned using a fleece cloth. The jet holes may be cleaned using a wire of 1 mm diameter, if the jet holes are blocked, which occurs very rarely.

A B C D

For improved life, the hoses may be treated now and then with cleaning agent (e.g. silicone) by spraying and distributing using a cloth. At the same time, the O-Rings of the couplings may be sprayed with silicone, twice a year depending on the number of flights. The rubber rings remain flexible for longer and damages are reduced during connecting hoses and hence sealing characteristics are retained for longer.

A B C D



4.3. Constituent parts of the burner FB 6

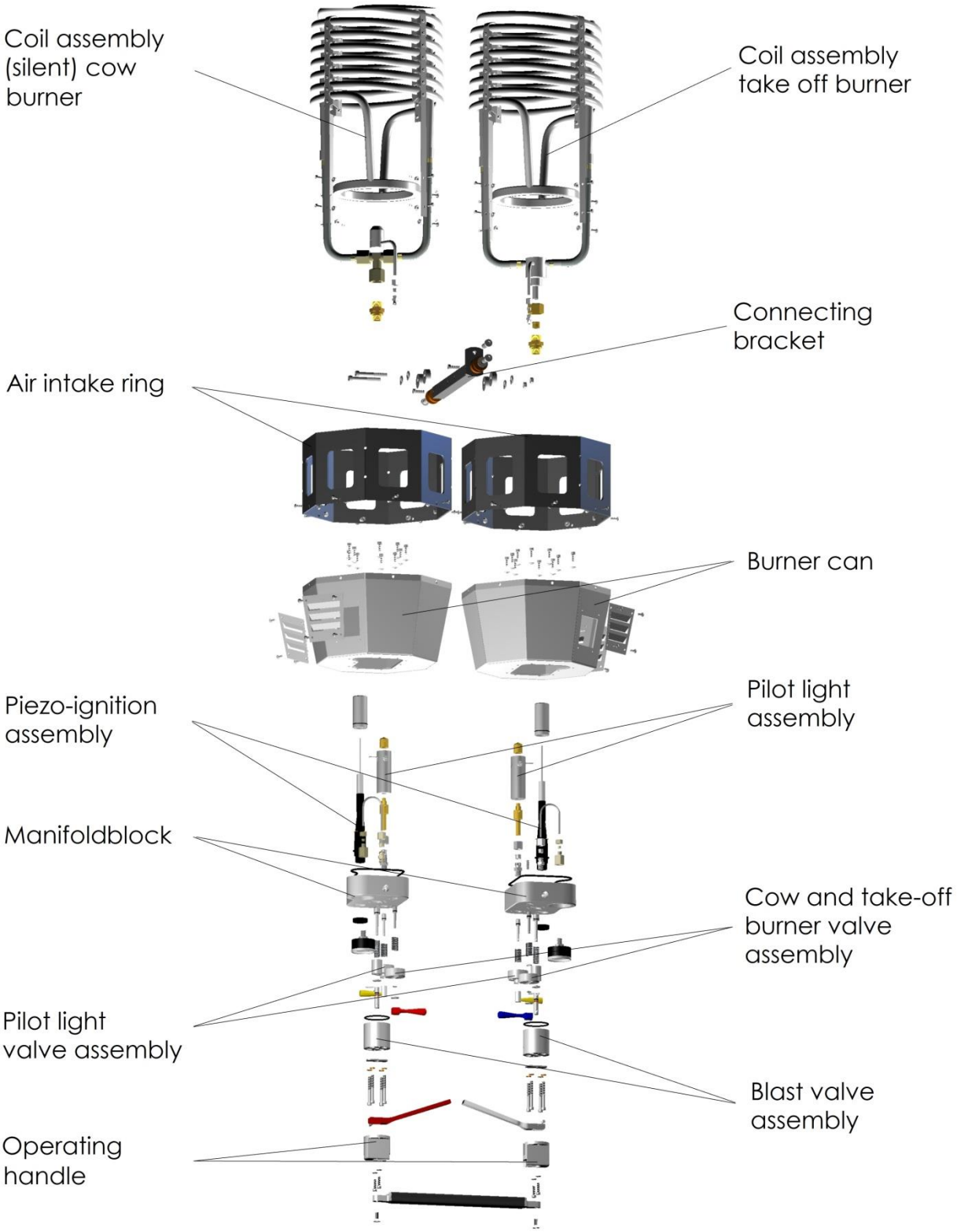

pic.4-1: Parts of FB6 burner



4.3.1. Removal of Piezo-ignition unit

The union nut (6) must be loosened by hand or using a small adjustable wrench. Grip the top end of the Piezo-electrode (1) and rotate the electrode to one side away from the baffle plate of the pilot light housing. After that, the Piezo-ignition unit (1) together with the aluminium sleeve (2) can be removed upwards. The replacement electrode is supplied by the manufacturer in straight condition and needs to be bent to match the old electrode. Damage to the ceramic part is to be avoided during bending. The distance of the electrode to the baffle plate must be approximately 3 mm.

A functional check is required after replacement.

B C D



No.	Title
1	Piezo-Ignition unit
2	Aluminium sleeve
3	O-ring 20x1
4L/R	manifold block left/right
5	O-ring 115x3
6	retaining nut

pic.4-2: Piezo-ignition assembly



4.3.2. Removal of pilot light assembly

In order to remove the pilot light assembly, loosen the union nut (4) from its position. The pilot light assembly may then be removed. Sometimes it occurs that the jet unit (3) is blocked; in this case, it needs to be cleaned. For that spray special cleaning agent (brake cleaner) into the lower hole and subsequently rinse with compressed air. If the jet is still blocked, try to clean it using a thin wire. If this procedure is not successful, the pilot light assembly is to be replaced completely.

B C D

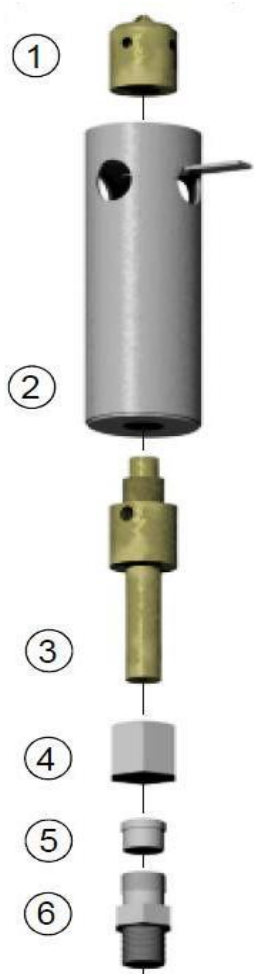

No.	Title
1	upper part/jet unit
2	pilot light housing
3	jet unit
4	union nut
5	olive
6	fitting GE-8-LL 1/8 NPT

pic.4-3: Pilot light assembly



4.3.3. Removal of pilot light valve assembly

It is recommended to replace the O-ring (1) at the annual inspection - but at least every 100 hours. For that, the pilot light valve needs to be removed. The socket cap screws (8) are unscrewed and the entire pilot light valve is then removed from the manifold block. Remove old O-ring and clean all sealing surfaces of the valve with silicone remover and a lint free cloth. After that clean with residue free break cleaner. The new O-ring can now be greased with Teccem Flouronox Paste KL and installed to the stem. The valve can now be fitted back into the manifold block. The socket cap screws (8) are fitted with new anti-vibration washers (7) and fixed with Loctite® 243 and then re-installed with a tightening torque of 0.5 Nm. If any of the other parts of the pilot light valve are faulty, the entire valve needs to be sent to the manufacturer for repair.

B C D

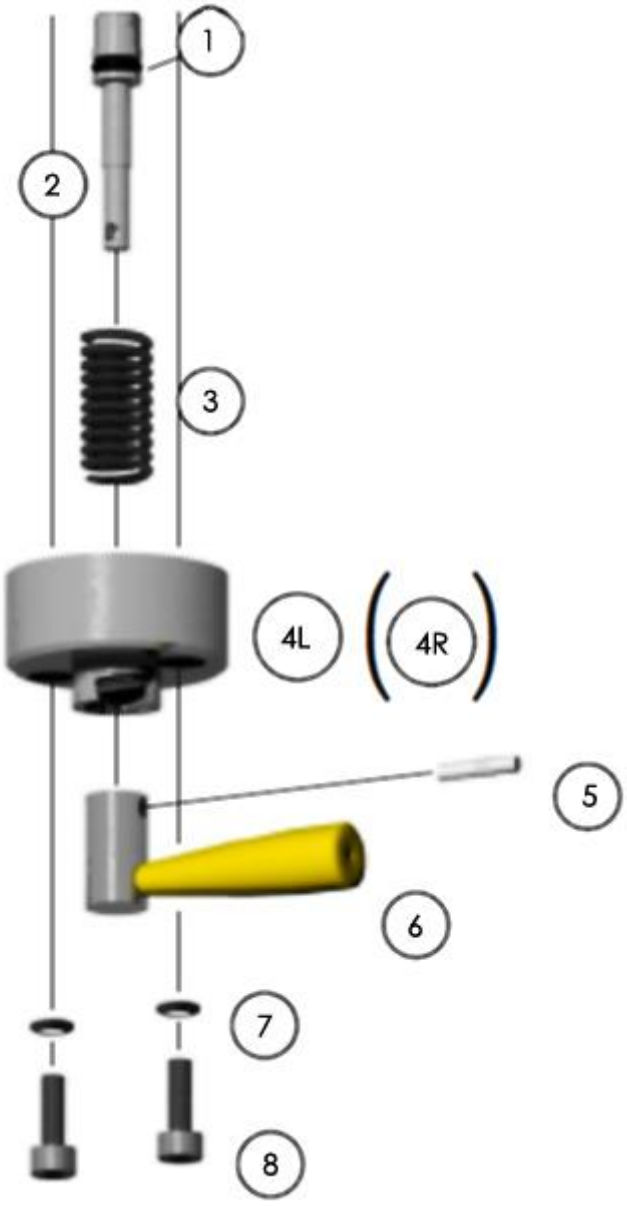

No.	Title
1	O-ring 4,47 x 1,78
2	valve piston
3	pressure coil spring
4 L/R	upper body of pilot light L/R
5	grub screw M3
6	pilot light operating lever
7	anti Vibration washer DN 4,3
8	socket cap screw M4x16

pic.4-4: Pilot light valve assembly



4.3.4. Replacement of burner coils - take-off burner FB6

In order to remove the burner coil assembly, the union nut (3) needs to be un-screwed using a spanner size 22 mm as well as the union nut (9) using a spanner size 14 mm. Then the raised countersunk screws (7) of the coil mounting are removed from the housing. Now the coil is removed from the housing. This can only be carried out by the manufacturer as the coil system is to be pressurized after re-assembly in order to carry-out a subsequent pressure test.

D

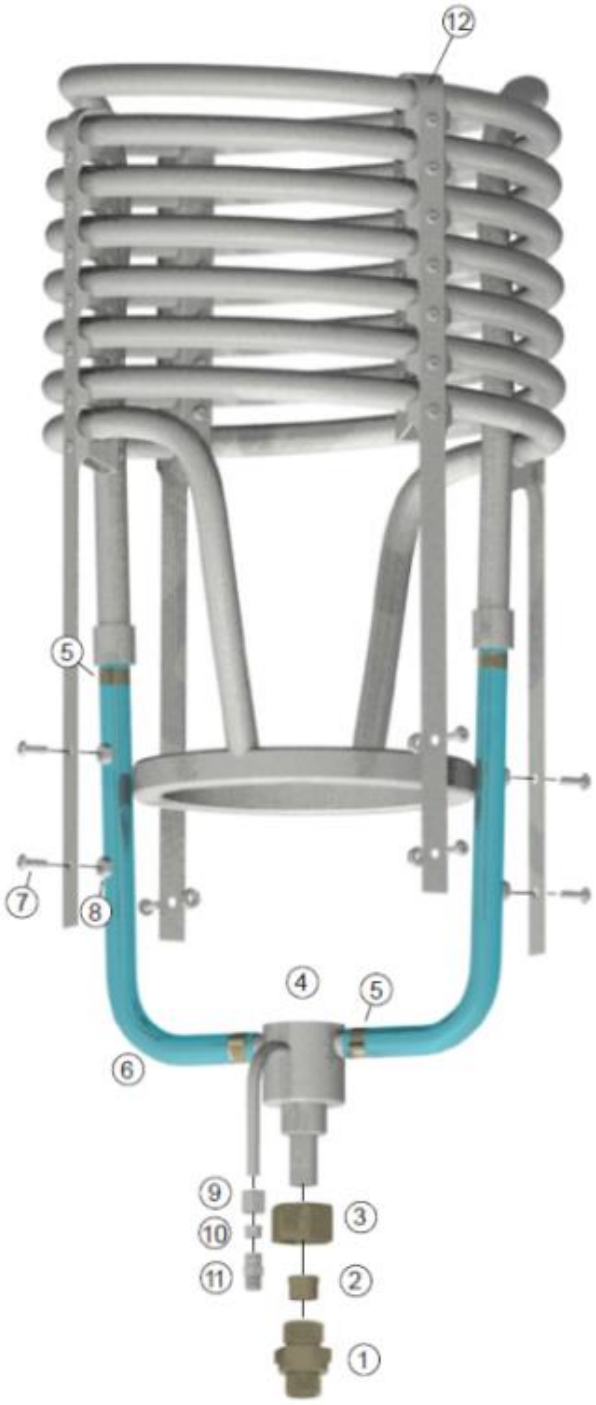

No.	Title
1	GE- 12-LL 3/8''
2	olive D12
3	union nut
4	junction unit
5	hose clamps
6	Silontex hose
7	raised countersunk screw M4x12
8	nut M4
9	union nut
10	olive D6
11	fitting GE-6-LL 1/8'' NPT
12	coil bracket

pic.4-5: burner coil assembly – take-off burner FB6

4.3.5. Replacement of burner coils - silent (cow) burner

In order to remove the burner coil assembly, the union nut of the fitting GE-12-LL 3/8" (1) is to be un-screwed. Then the raised countersunk screws (4) of the coil mounting are removed from the housing. Then the coil is removed from the housing. This can only be carried out by the manufacturer as the coil system is to be pressurized after re-assembly in order to carry-out a subsequent pressure test.

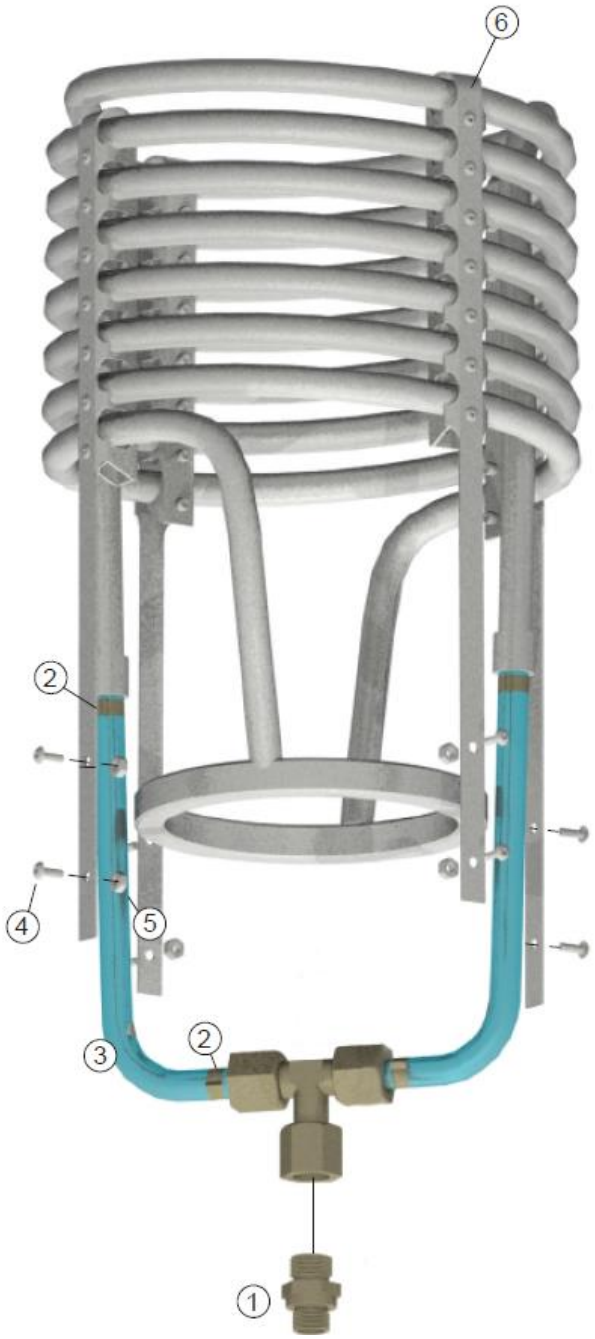

No.	Title
1	fitting GE- 12-LL 3/8''
2	hose clamps
3	Silontex hose
4	raised countersunk screws M4X12
5	nut M4
6	coil bracket

pic.4-6: burner coil assembly – silent (cow) burner FB6

4.3.6. Removal of silent (cow) burner valve assembly

It is recommended to replace the O-rings (6+11) every one to two years. To remove the silent (cow) burner valve, both Allen screws (1) are removed. Then the valve is removed from the manifold block. Remove old O-ring (11). Clean all sealing surfaces of the valve with silicone remover and a lint free cloth. After that clean with residue free break cleaner. The new O-ring can now be installed and greased with Teccem Flouronox Paste KL and fitted into the manifold block. To replace the O-ring (6), the pin (4) needs to be removed from the valve piston (10) using a punch. Following, the operating level (3) and the Nylon washer (5) are removed and the O-ring replaced. For re-assembly, the pin (4) needs to be replaced. The Allen screws (1) are fitted with new anti vibration washers (2) and fixed with Loctite® 243 and then re-installed with a tightening torque of 0.5 Nm.

B C D

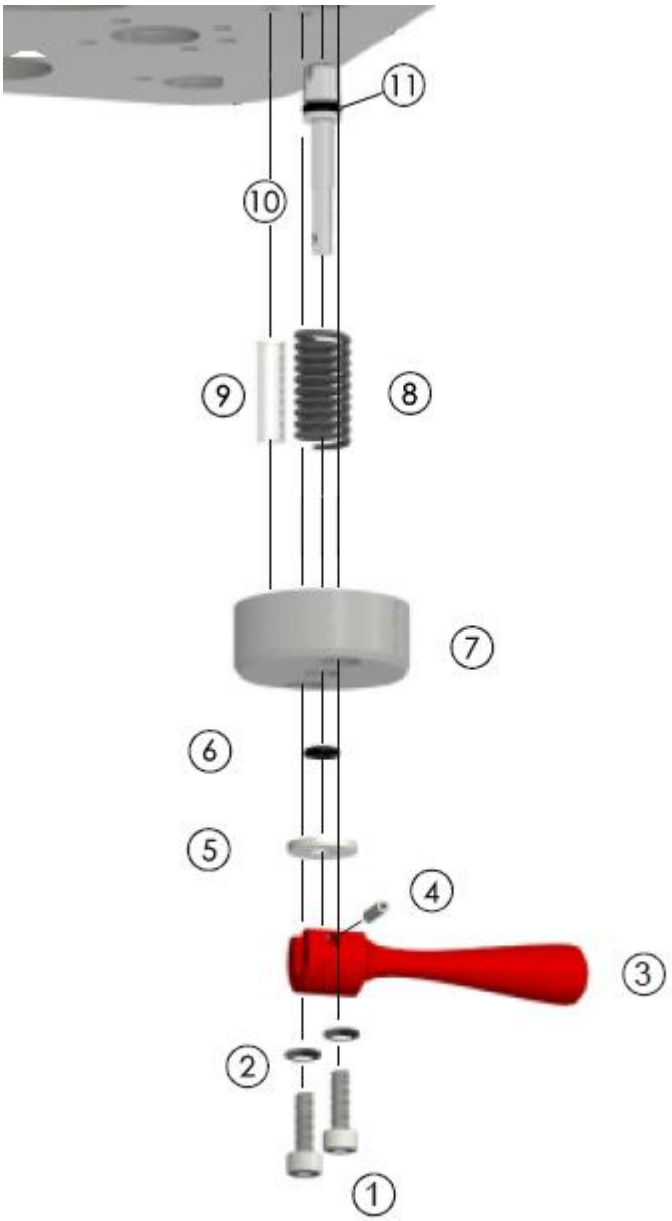

No.	Title
1	Allen screw M4 x 16
2	anti Vibration washer DN4,3
3	operating lever, red
4	pin 2,5x12
5	Nylon washer
6	O-Ring 3,68 x 1,78
7	upper part silent burner
8	coil spring
9	PE-hose 4 x 1
10	valve piston
11	O-Ring 4,47 x 1,78

pic.4-7: Silent-(cow) burner valve unit

4.3.7. Removal of silent (cow) burner valve

To remove the silent (cow) burner valve, the union nut needs to be un-screwed. Then, the silent burner can be removed upwards.

B C D

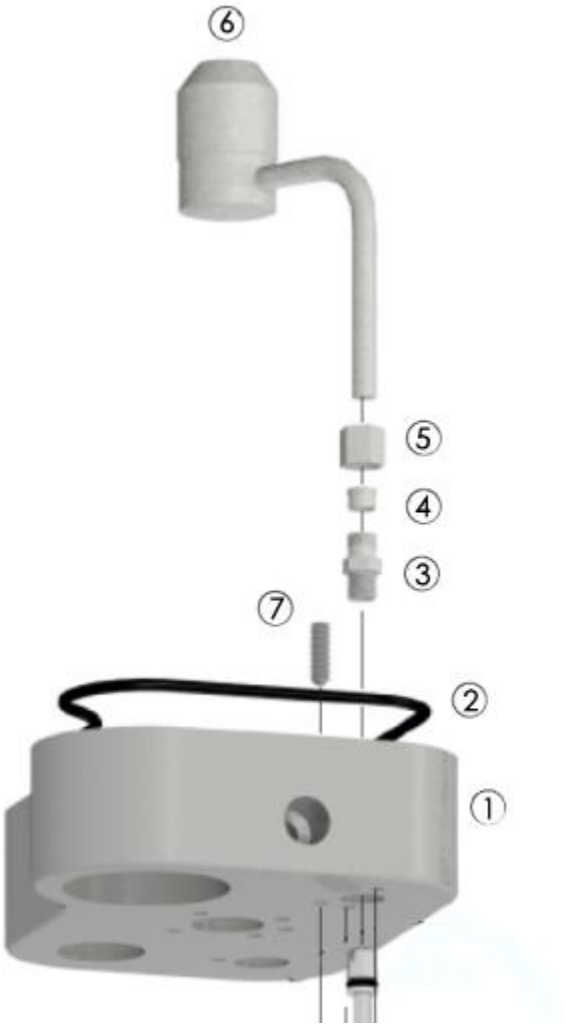

No.	Title
1	Manifold block left hand
2	O-ring 115 x 3
3	fitting GE-6-LL 1/8´´ NPT
4	olive D6
5	union nut
6	silent burner unit
7	overflow tube M5

pic.4-8: silent (cow) burner valve assembly

4.3.8. Removal of pressure gauges

In order to remove a pressure gauge, both union nuts (4) and (6) inside the burner housing are to be un-screwed. Then, the inlet pipe (5) can be removed. Now the straight connection (2) is removed and the pressure gauge is removed. Installation of a new pressure gauge is done by inserting it into the housing. Prior to installation, female and male thread are to be cleaned using brake cleaner. Loctite® is applied to connection (2) and the fitting is to be screwed-on hand tight and left for the Loctite® to set. Then, the inlet pipe (5) with both union nuts (4) and (6) is installed. Re-installed components are to be subjected to a pressure test and checked for leaks with leak detection spray.

C D

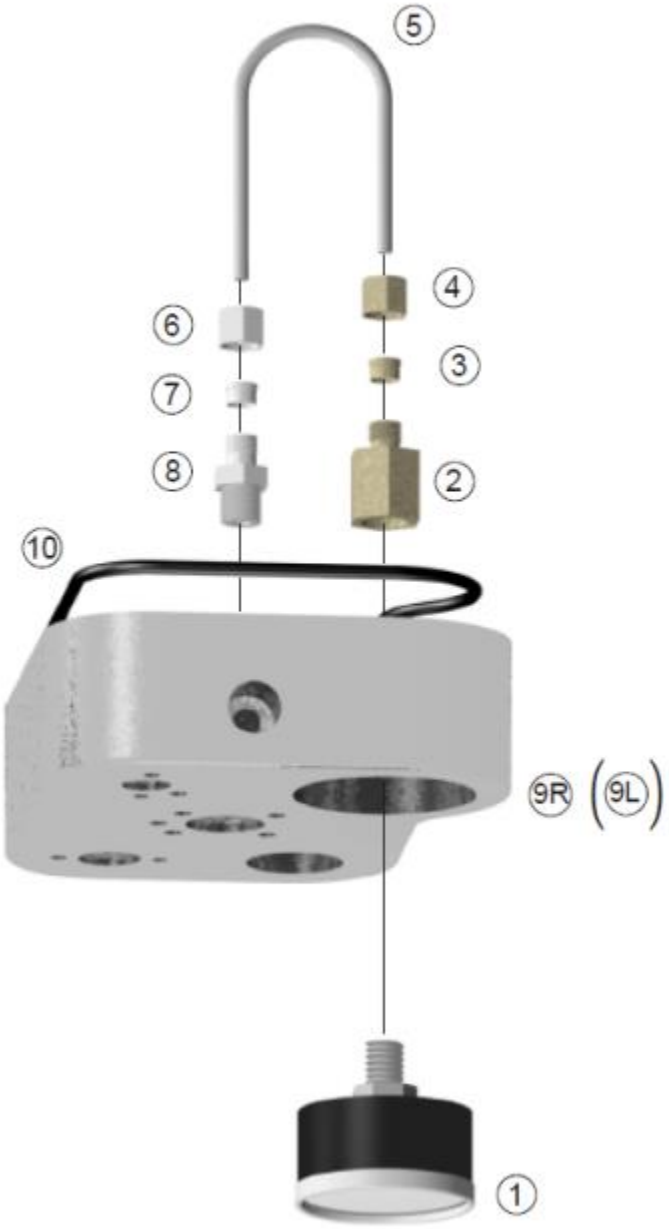

No.	Title
1	pressure gauge
2	fitting GAI-4-LLR
3	olive D4
4	union nut
5	inlet pipe 4 x 1
6	union nut
7	olive D4
8	GE-4-LL 1/8'' NPT
9 L/R	Manifold block L/R
10	O-ring 115 x 3

pic.4-9: Pressure gauge assembly



4.3.9. Removal of blast valve

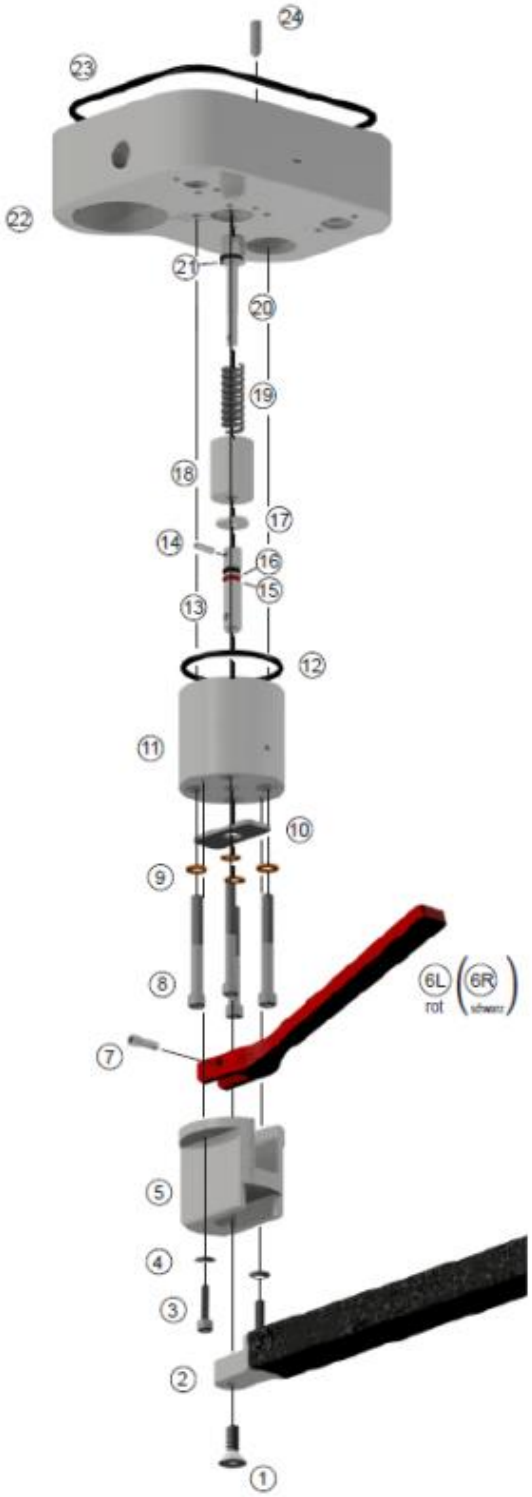

No.	Title
1	countersunk screw
2	handle bar
3	Allen screwM5x16
4	anti vibration washer
5	handle bar attachment
6L/R	operating lever L/R
7	grub screw M5
8	Allen screwM5x45
9	copper gasket 5x9x1
10	stainless steel washer
11	blast valve upper body
12	O-Ring 38x2,5
13	valve piston extension
14	spiral pin 2,5x10
15	O-Ring Silicon 5x1,5
16	O-Ring 5x1,5
17	Nylon washer
18	inner part of blast valve upper body
19	coil spring, large
20	valve piston, large
21	O-Ring 7,65 x 1,78
22	manifold block, left hand
23	O-ring 115x3
24	overflow tube

pic.4-10: Blast valve unit L/R



To replace the O-rings of the blast valve, remove the handle bar attachment (5) and the handle bar (2) first by removing the Allen screws (3). The operating lever (6) and the stainless steel washer (10) are removed after removal of the grub screw (7). In order to remove the upper body of the blast valve (11), un-screw the four Allen screws (8). Now the upper body of the blast valve and its inner part (18) can be removed from the manifold block as well as the inner part can be removed from the upper body. Then, the O-rings (21), (15), (16) and (12) are replaced with new ones. Apply Teccem Flouronox Paste KL grease to O-ring (21) and technical Vaseline on o-rings (15) and (16). Do not apply grease to O-ring (12).
Now re-insert the inner part (18) into the upper body of the blast valve (11). Place the assembly on the manifold block and install the four Allen screws (8) with a tightening torque of 1.0 Nm.
The four copper gaskets (9) do not need to be replaced. Now re-assemble the stainless steel washer (10) and the operating lever (6). The grub screw (7) is to be cleaned and Loctite® 243 applied prior to installation of the operating lever. Now, the handle bar attachment (5) and the handle bar (2) are re-installed. Loctite® is applied to the attachment screws of the handle bar attachment, then they are tightened with a torque of 1.0 Nm. During that both anti-vibration washers (4) are to be replaced. If the inner part of the upper body of the blast valve (18) is faulty, it needs to be replaced completely. For this only an original part from the manufacturer must be used.

B C D



4.3.10. Removal of take-off burner valve

It is recommended to replace both O-rings (6+11) every one to two years. To remove the take-off burner valve, the two Allen screws (1) are to be removed. Then, the valve can be removed from the manifold block. Remove the old O-ring and clean all sealing surfaces of the valve with silicone remover and a lint free cloth. After that clean with residue free break cleaner. The new O-ring can now be installed and greased with Teccem Flouronox Paste KL. The valve can be inserted into the manifold block. To replace the O-ring (6), remove the pin (4) from the valve piston (10) using a punch. Now, the operating lever (3) and the nylon washer (5) can be removed and the O-ring be replaced. The pin (4) is to be replaced prior to re-assembly. The Allen screws (1) are fitted with new anti-vibration washers (2) and Loctite® 243 is applied. Then the screws are tightened with a torque of 0.5 Nm. The start burner valves of FB 6 manufacturer before 2009 have a smaller stem diameter. These valve upper body are attached to the valve block with M4 cylinder head bolts. These valves are incompatible to FB 7 burners.

B C D

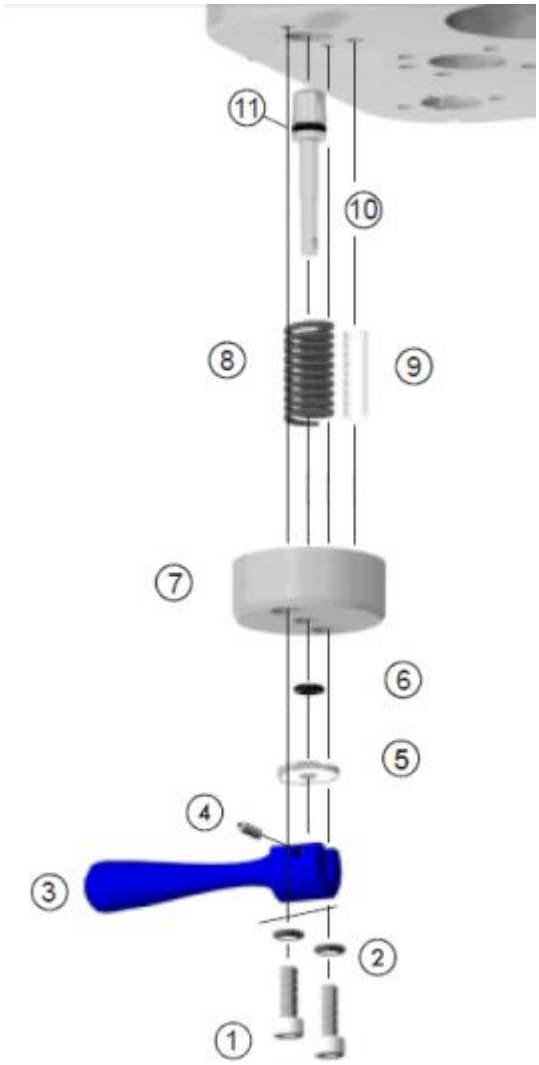

No.	Title
1	Allen screw M4 x 16
2	anti vibration washer DN 4,3
3	operating lever, blue
4	spiral pin 2,5 x 12
5	Nylon washer
6	O-ring 3,68 x 1,78
7	upper body of take-off burner
8	coil spring, small
9	PE-hose 4 x 1
10	valve piston, small
11	O-ring 4,47 x 1,78

pic.4-11: Take-off burner valve assembly



4.3.11. Replacement of burner housing

First the connection bracket attached to the air inlet cans (1) and the handle bar are removed. The raised countersunk screws of the coil attachments are to be removed in order to disassemble the air inlet cans (1) from the burner can (5). As the nuts are glued in place, a hot air fan is to be used in order to remove them without excessive force. After that, the raised countersunk screws (2) that hold the air inlet can and the burner can together, can be removed. Now the air inlet can is removed by sliding it over the burner coil.

D

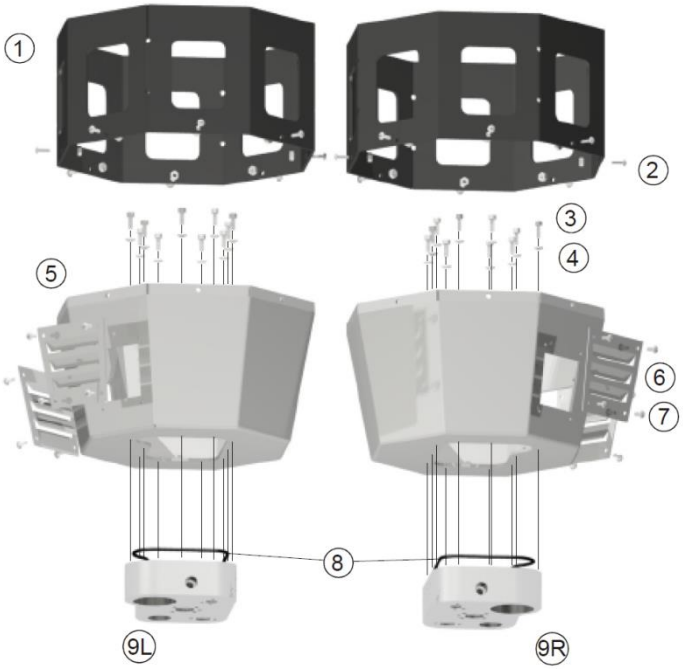

pic.4-12: Burner housing

No.	Title
1	Air intake ring
2	raised countersunk screw M4 x 12
3	Allen screw M4 x 12
4	anti vibration washer
5	burner can
6	inspection opening cover
7	raised countersunk screw M4 x 8
8	O-ring 115 x 3
9L/R	manifold block L/R



4.3.12. Replacement of connection bracket

The two Allen screws (5) are to be removed as they are used to secure the attachment screws (1). The attachment screws (1) fixing the burner to the swivel joint are to be removed prior to removal of the connection bracket from the burner. Subsequently, the two nuts (10) and the associated Allen screws (8) are removed. The nuts are to be removed from the Allen screws using excessive force as they are secured in place by welding by the manufacturer during the burner build process. This will cause irreversible damage to the Allen screws.

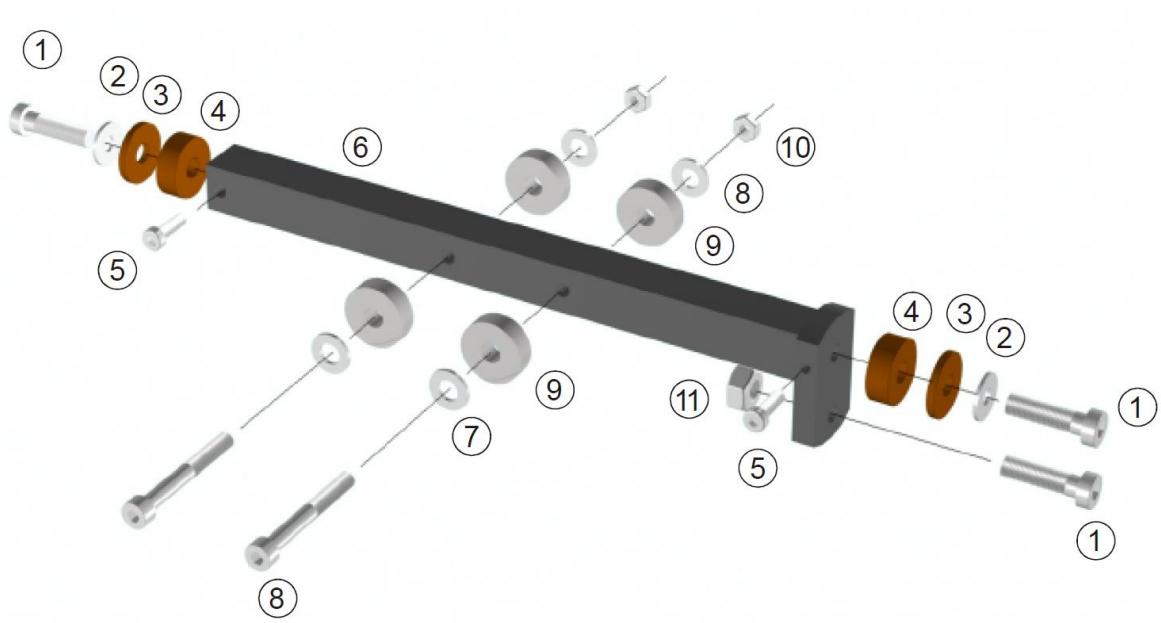

pic.4-13: Connection bracket

No.	Title
1	Allen screw M8x35
2	washer DN 8,4
3	Pertinax washer 25x8,5x3
4	Pertinax washer 25x8,5x9
5	Allen screw M5x16
6	connection bracket
7	washer DN 6,4
8	Allen screwM6x50
9	Aluminium washer
10	Nut M6
11	Nut M8



During re-assembly, the air inlet cans and the connection bracket are installed using new Allen screws M6 x 50 (8). Securing the nuts is done by welding again. During re-installation of the burner onto the swivel joint, the attachment screws (1) are fixed first to the connection bracket and are tightened so that the burner can still be swivelled easily. Then they are secured using the Allen screws (5) which have Loctite® 243 applied.

B C D

If after some time the burner can be swivelled too easily, the burner can be adjusted as follows:

1) Burner with mechanical height adjustment:

   First the Allen screw (5) is to be removed. Then re-tighten the attachment screw (1) and re-secure with Allen screw (5). Subsequently, the Allen screws M5 x 16 are removed from the swivel joint. Now the Allen screws M8 x 45 can be re-tightened and re-secured with Allen screws M5 x 16.

2) Burner with height adjustment by gas spring strut:

   At the cross gimbal are two grub screws with Allen inserts which can be re-tightened.

B C D

4.4. Constituent parts of the burner FB 7

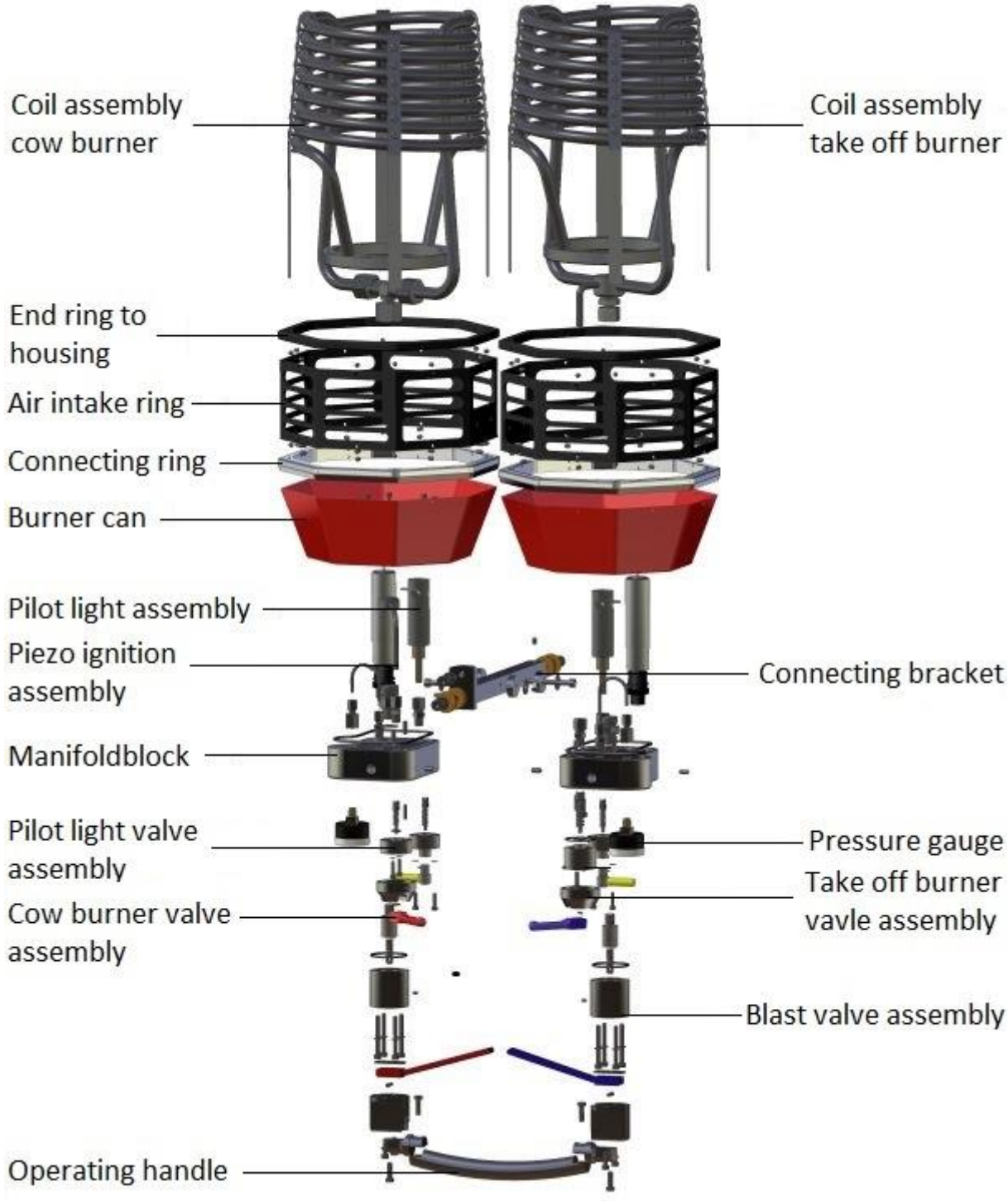

pic.4-14: FB 7 burner assembly



4.4.1. Removal of Piezo-ignition unit

The union nut (4) must be loosened by hand or using a small adjustable wrench. Grip the top end of the Piezo-electrode (1) and rotate the electrode to one side away from the baffle plate of the pilot light housing. After that, the Piezo-ignition unit (1) together with the aluminium sleeve (2) can be removed upwards. The replacement electrode is supplied by the manufacturer in straight condition and needs to be bent to match the old electrode. Damage to the ceramic part is to be avoided during bending. The distance of the electrode to the baffle plate must be approximately 3 mm.

A functional check is required after replacement.

B C D

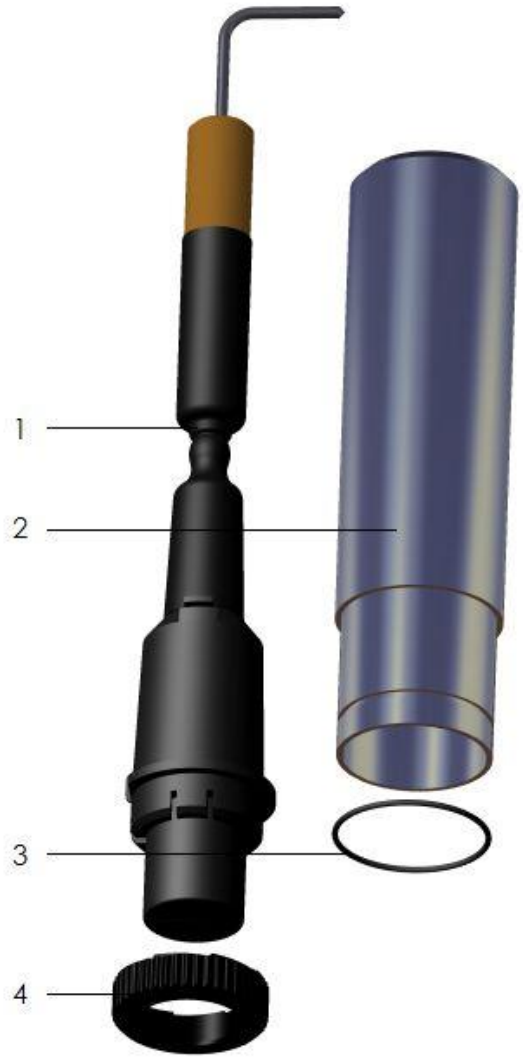

No.	Title
1	piezo igniter
2	aluminium sleeve
3	O-ring 20x1
4	retaining nut

pic.4-15: Piezo-ignition assembly



4.4.2. Removal of pilot light assembly

In order to remove the pilot light assembly, loosen the union nut (4) from its position. The pilot light assembly may then be removed. Sometimes it occurs that the jet unit (3) is blocked; in this case, it needs to be cleaned. For that spray special cleaning agent (brake cleaner) into the lower hole and subsequently rinse with compressed air. If the jet is still blocked, try to clean it using a thin wire. If this procedure is not successful, the pilot light assembly is to be replaced completely.

B C D



No.	Title
1	upper part/jet unit
2	pilot light housing
3	jet unit
4	fitting GE-8-LL 1/8 NPT

pic.4-16: Pilot light assembly



4.4.3. Removal of pilot light valve assembly

It is recommended to replace the O-ring (1) at the annual inspection - but at least every 100 hours. For that, the pilot light valve needs to be removed. The socket cap screws (8) are removed and the entire pilot light valve is then removed from the manifold block. Remove old O-ring. Clean all sealing surfaces of the valve with silicone remover and a lint free cloth. After that clean with residue free break cleaner. The new O-ring can now be installed and greased with Teccem Flouronox Paste KL. The Valve can now be fitted into the manifold block. The socket cap screws (8) are fitted with new anti-vibration washers (7) and fixed with Loctite® 243 and then re-installed with a tightening torque of 1 Nm. If any of the other parts of the pilot light valve are faulty, the entire valve needs to be sent to the manufacturer for repair.

B C D

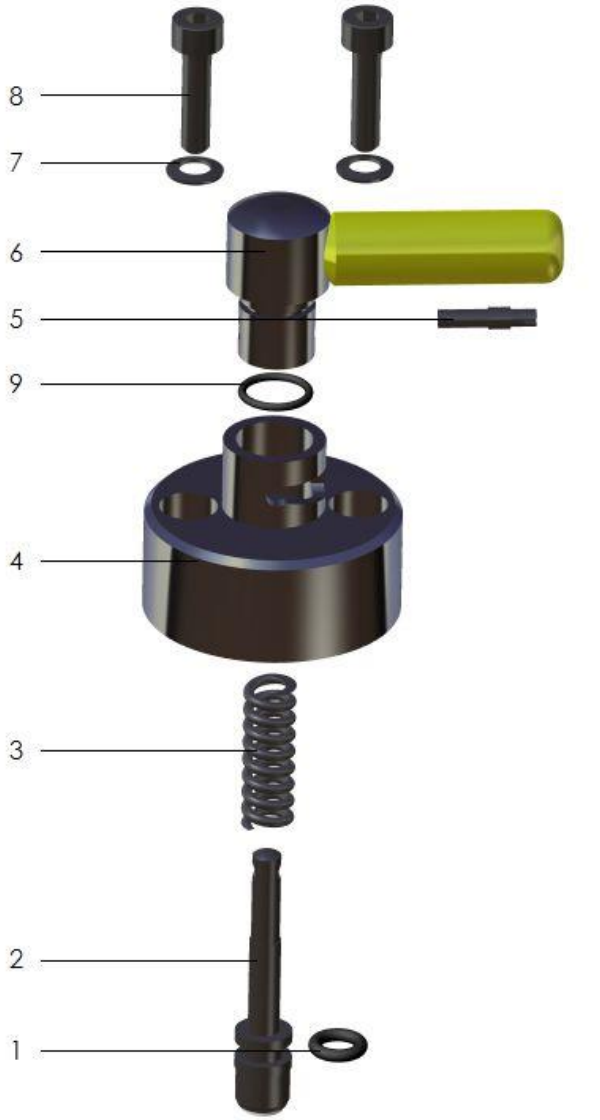

No.	Title
1	O-ring 4,47 x 1,78
2	valve piston
3	pressure coil spring
4	upper body of pilot light
5	grub screw M3 with recess
6	pilot light operating lever
7	anti Vibration washer DN 4,3
8	socket cap screw M4x16
9	O-ring 8 x 1,1

pic.4-17: Pilot light valve assembly



4.4.4. Replacement of burner coils - take-off burner FB 7

In order to remove the burner coil assembly, the union nut of the fitting (1) needs to be un-screwed using a spanner size 22 mm as well as the union nut of the other fitting (not displayed here) using a spanner size 14 mm. Then the 8 grub screws of the housing rings, in the inside of the housing, need to be loosened. Now the coil is removed from the housing. This can only be carried out by the manufacturer as the coil system is to be pressurized after re-assembly in order to carry-out a subsequent pressure test.



No.	Title	D
1	EVGE 12L R ED	
2	distributor	
3	jet ring	
4	coil	
5	coil brackets with rivets	

pic.4-18: burner coil assembly – take-off burner FB 7



4.4.5. Replacement of FB 7 cow burner coil

In order to remove the burner coil assembly, the union nut of the fitting EVT 14S (1) is to be un-screwed. Then the 8 grub screws of the housing rings, in the inside of the housing, need to be loosened. The coil can be removed from the housing. This can only be carried out by the manufacturer as the coil system is to be pressurized after re-assembly in order to carry-out a subsequent pressure test.

D



No.	Title
1	fitting EVT 14S
2	jet ring
3	coil
4	coil bracket

pic.4-19: FB 7 cow burner coil assembly



4.4.6. Removal of cow burner valve assembly

It is recommended to replace the O-rings (10+13) every one to two years. To remove the cow burner valve, the valve cap needs to be removed. This can be done by loosening the grub screw (2). Both Allen screws (1) must be removed in the next disassembling step. The valve can now be removed from the manifold block. Remove the old O-ring (13). Clean all sealing surfaces of the valve with silicone remover and a lint free cloth. After that clean with residue free break cleaner. The new O-ring can now be installed and greased with Teccem Flouronox Paste KL. The vlave can now be fitted back into the manifold block. To replace the O-ring (10), the pin (4) needs to be removed from the valve piston (10) using a punch. Following, the operating level (3) and the Nylon washer (7) are removed and the O-ring replaced. For re-assembly, the pin (4) needs to be replaced. The Allen screws (1) are fitted with new anti vibration washers (6) and fixed with Loctite® 243 and then re-installed with a tightening torque of 1 Nm. The last step is to place the cap (1) on the valve with the lever showing in the requested direction and tightening the grub screw (2).

B C D

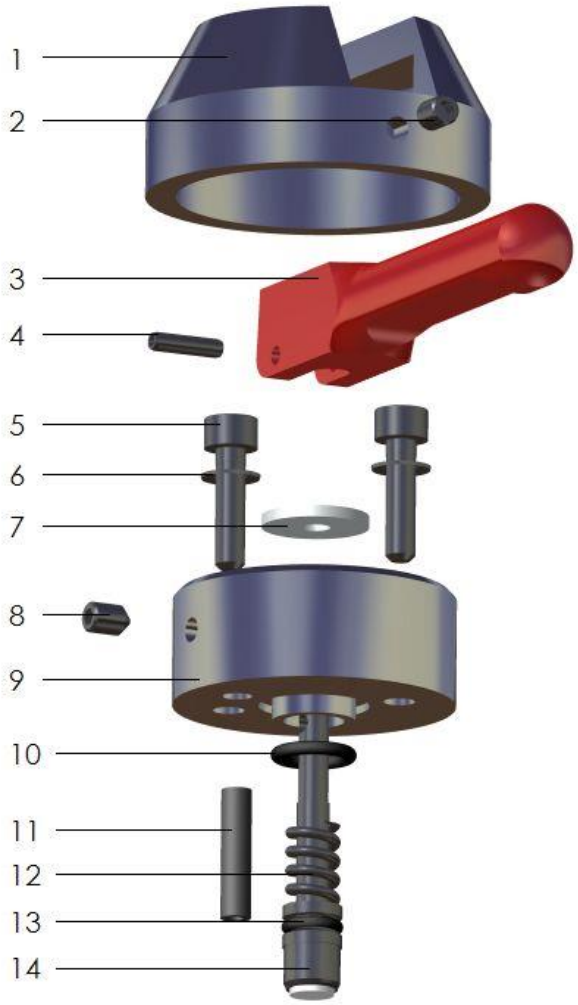

No.	Title
1	valve cap
2	grub screw M4 x 6
3	operating lever, red
4	pin 2,5x12
5	Allen screw DIN 912 M4 x 16
6	anti Vibration washer DN4.3
7	Nylon washer
8	grub screw M4 x 6
9	upper part cow burner
10	o-ring 7,65 x 1,78
11	PE-hose 4 x 1
12	coil spring
13	o-ring 4,47 x 1,78
14	valve piston DN8

pic.4-20: cow burner valve unit



4.4.7. Removal of cow burner jet

To remove the cow burner valve, the union nut needs to be un-screwed. Then, the silent burner can be removed upwards.

B C D



No.	Title
1	cow burner jet
2	fuel line
3	fitting GE-6-LL 1/8´´ NPT

pic.4-21: Cow burner assembly



4.4.8. Removal of pressure gauges

In order to remove a pressure gauge, both union nuts (3) and (4) inside the burner housing are to be un-screwed. Then, the pressure line (5) can be removed. Now the fitting (4) is removed and the pressure gauge can be pulled out of the manifold block. Installation of a new pressure gauge is done by inserting it into the housing. Prior to installation, female and male thread are to be cleaned using brake cleaner. Loctite® is applied to connection (2) and the fitting is to be screwed-on hand tight and left for the Loctite® to set. Then, the pressure line (5) with both union nuts (3) and (4) can be re-installed. All loosened connections must be subjected to a pressure test and checked for leaks with leak detection spray.

C D

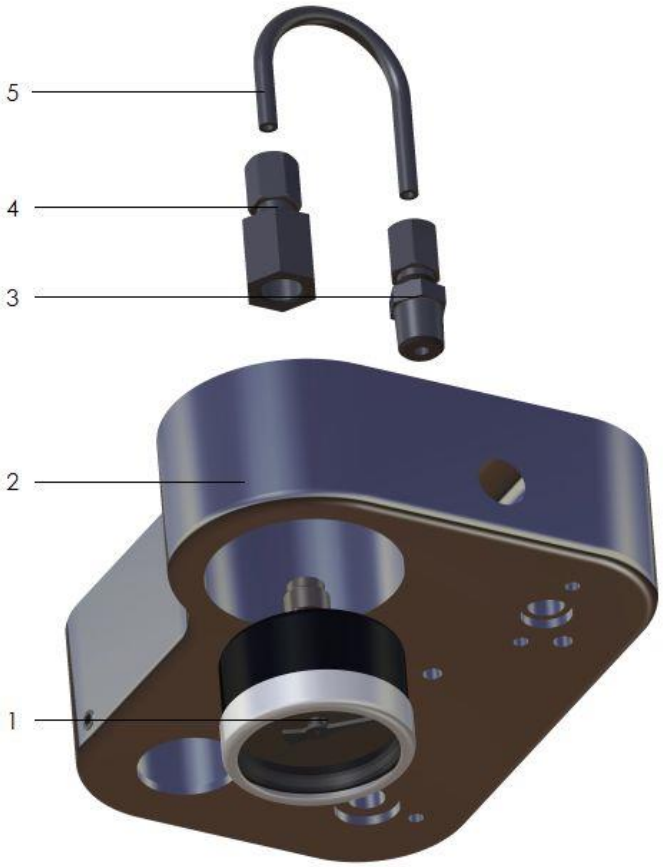

No.	Title
1	pressure gauge
2	manifold block
3	fitting GE-4-LL 1/8 NPT
4	fitting GAI-4-LLR
5	pressure line 4 x 1

pic.4-22: Pressure gauge

4.4.9. Removal of blast valve

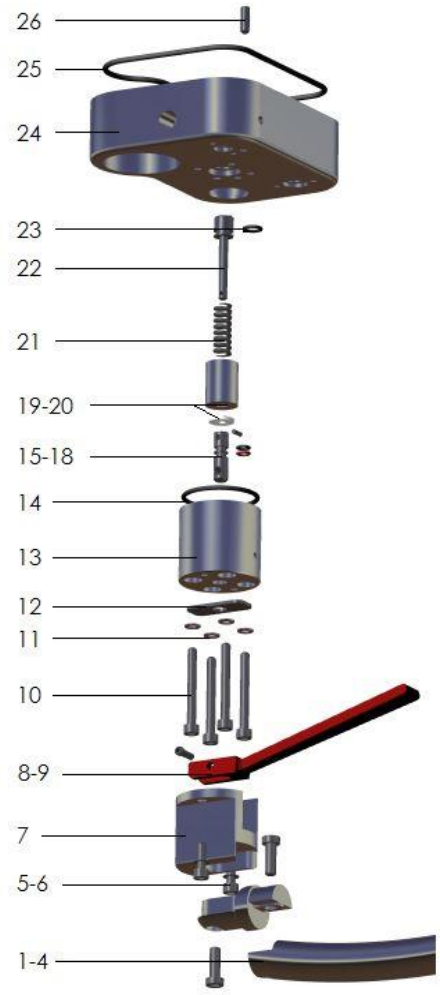

No.	Title
1	handle bar
2	handle bar attachment piece
3	allen screw DIN 912 M6x18
4	allen screw DIN 912 M6x18
5	allen screw DIN 912 M5x16
6	anti vibration washer DN5,3
7	handle bar attachment
8	operation lever
9	grub screw M3 with recess
10	allen screw DIN 912 M5x45
11	copper gasket 5x9x1
12	stainless steel washer
13	blast valve upper body
14	O-ring 38x2,5
15	valve piston Extension
16	pin 2,5x10
17	O-ring Silicon 5x1,5
18	O-ring 5x1,5
19	inner part of blast valve upper body
20	Nylon washer
21	coil spring, DN10
22	Valve piston, DN11
23	O-ring 7,65 x 1,78
24	manifold block
25	O-ring 115x3
26	overflow tube

pic.4-23: blast valve unit

B C D

To replace the O-rings of the blast valve, remove the handle bar attachment (7) and the handle bar (1-4) first by removing the Allen screws (5). The operating lever (8) and the stainless-steel washer (12) are removed after removal of the grub screw. To remove the upper body of the blast valve (13), un-screw the four Allen screws (10). Now the upper body of the blast valve and its inner part (19) can be removed from the manifold block as well as the inner part can be removed from the upper body. Then, the O-rings (17), (18), (23) and (14) are removed. Clean all sealing surfaces of the valve with silicone remover and a lint free cloth. After that clean with residue free break cleaner. Install the new O-rings. Apply technical Vaseline to O-rings (17), (18) and lubricate O-ring (23) with Teccem Flouronox Paste KL. Do not apply grease to O-ring (14).
Now re-insert the inner part (19) into the upper body of the blast valve (13). Place the assembly on the manifold block and install the four Allen screws (10) with a tightening torque of 1.0 Nm.

The four copper gaskets (11) do not need to be replaced. Now re-assemble the stainless steel washer (12) and the operating lever (8). The grub screw (9) is to be cleaned and Loctite® 243 applied prior to installation of the operating lever. Now, the handle bar attachment (7) and the handle bar (1-4) are re-installed. Loctite® is applied to the attachment screws of the handle bar attachment, then they are tightened with a torque of 1.0 Nm. During that both anti-vibration washers (6) are to be replaced. If the inner part of the upper body of the blast valve (19) is faulty, it needs to be replaced completely. For this only an original part from the manufacturer must be used.



4.4.10. Removal of take-off burner valve

It is recommended to replace both O-rings (7+15) every one to two years. To remove the take-off burner valve, the valve cap needs to be removed. This can be done by loosening the grub screw (2). Both allen screws (5) must be removed in the next disassembling step. The valve can now be taken of the manifold block. Remove the old O-ring. Clean all sealing surfaces of the valve with silicone remover and a lint free cloth. After that clean with residue free break cleaner. The new O-ring can now be installed and greased with Teccem Flouronox Paste KL. Insert the valve into the manifold block. To replace the O-ring (7), remove the pin from the valve piston (12) using a punch. Now, the operating lever (3) and the nylon washer (6) can be removed and the O-ring be replaced. The pin is to be replaced prior to re-assembly. The Allen screws (5) are fitted with new anti-vibration washers (4) and Loctite® 243 is applied. Then the screws are tightened with a torque of 1 Nm.

B C D

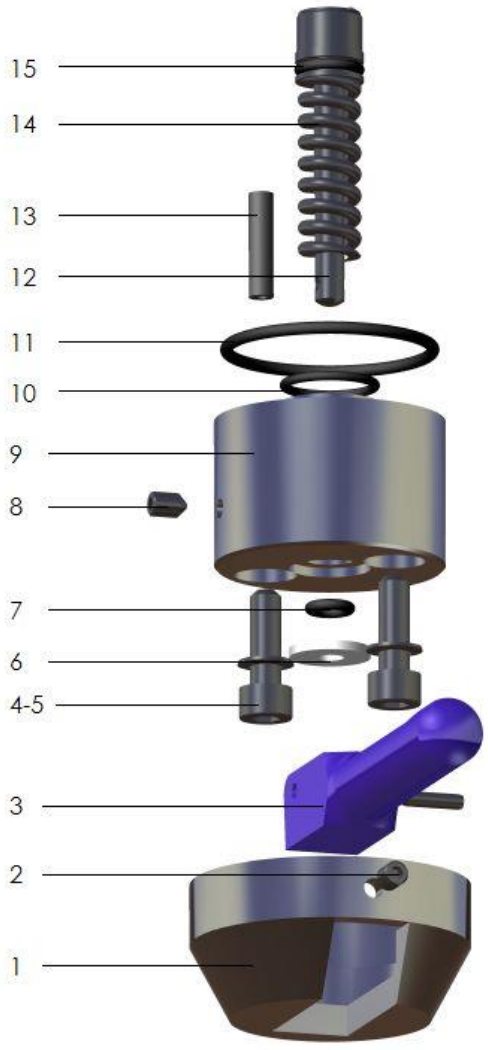

No.	Title
1	valve cap
2	grub screw M4 x 6
3	operating lever with pin 2,5 x 12
4	anti vibration washer DN 4,3
5	allen screw DIN 912 M4 x 16
6	Nylon washer
7	O-ring 3,68 x 1,78
8	grub screwM4 x 6
9	valve upper body
10	O-ring 13 x 1,5
11	O-ring 31 x 2
12	valve piston DN11
13	PE-hose 4 x 1
14	coli spring,DN10
15	O-ring 7,65 x 1,78

pic.4-24: Take-off burner valve assembly



4.4.11. Replacement of burner housing

In order to disassemble the burner housing the coils must be removed as described prior in this chapter. After having removed the burner coils the grub screws (7) and (8) must be loosened. The end ring is now ready to be removed. The same is being done to the grub screws (7-9) of the connection ring (2). The air intake ring and the connection ring can now be removed separately and the burner can is only connected to the manifold block via the allen screws (5). Repairs of this kind must only be executed by the manufacturer because the burner has to be pressure tested and tested for leaks after reassembly.

D

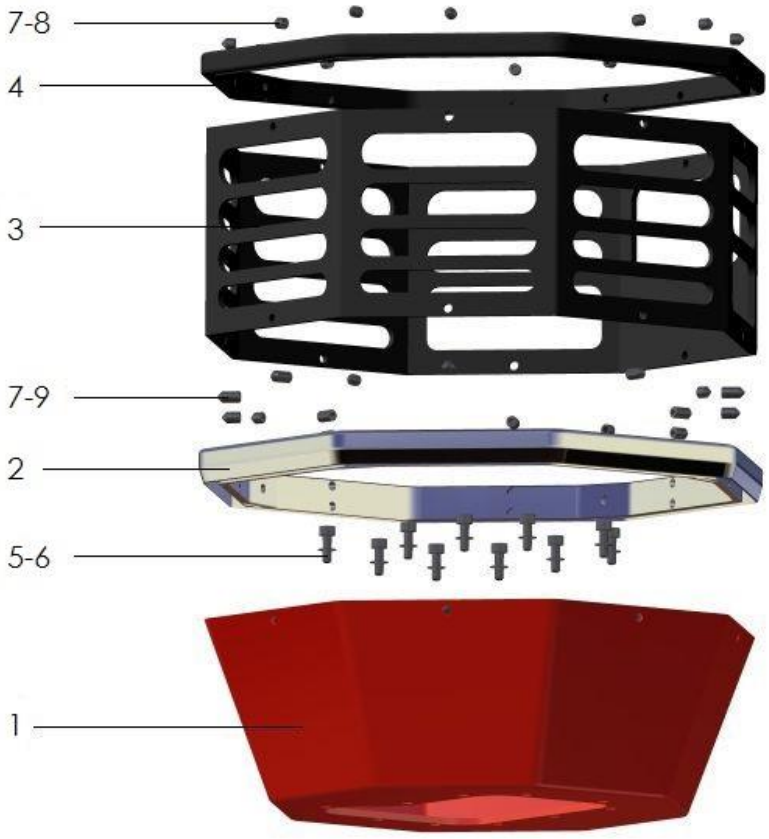

pic.4-25: Burner housing

No.	Title
1	burner can
2	connection ring
3	air intake ring
4	end ring
5	allen screw DIN 912 M4 x 12
6	anti vibration washer DN4,3
7	grub screw M5 x 6
8	grub screw M5 x 8
9	grub screw M5 x 10

4.4.12. Replacement of connection bracket

The two Allen screws (5) are to be removed as they are used to secure the attachment screws (1). The attachment screws (1) fixing the burner to the swivel joint are to be removed prior to removal of the connection bracket from the burner. Subsequently, the two nuts (10) and the associated Allen screws (8) are removed. The nuts are to be removed from the Allen screws using excessive force as they are secured in place by welding by the manufacturer during the burner build process. This will cause irreversible damage to the Allen screws.

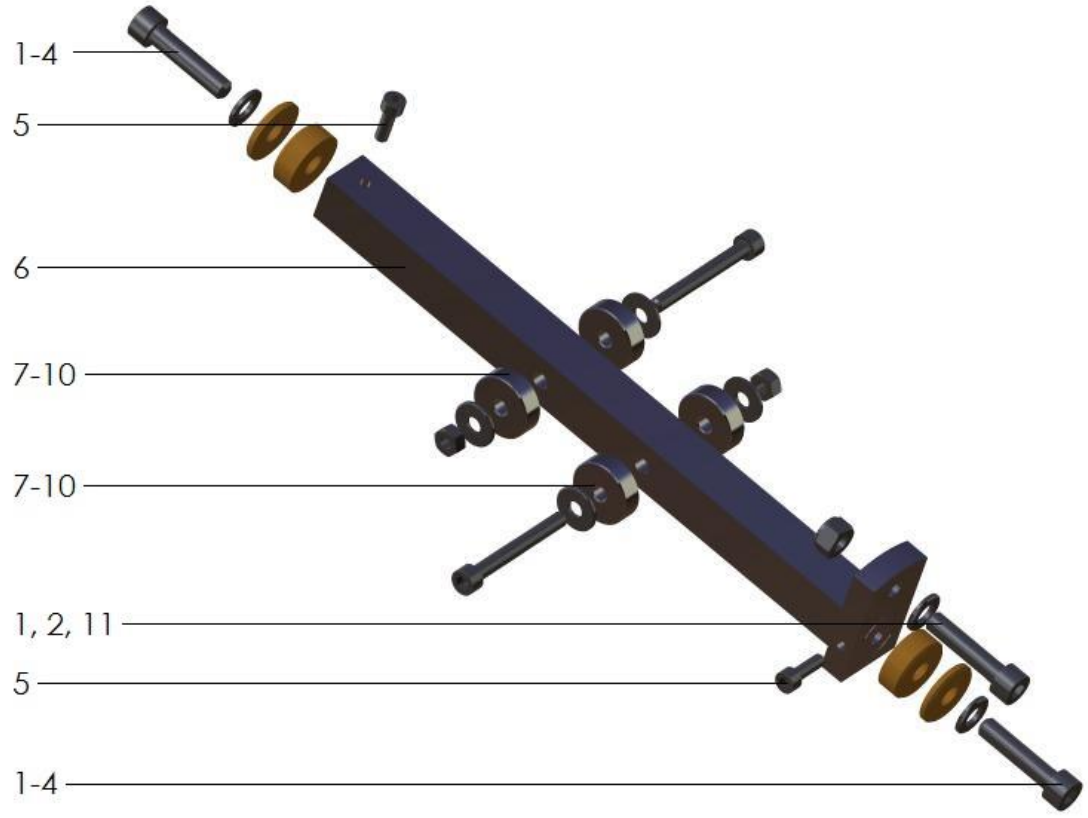

pic.4-26: Connection bracket

No.	Title
1	allen screws DIN 912 M8x35
2	washer DN8,4
3	Pertinax washer 25 x 8,5 x 3
4	Pertinax washer 25 x 8,5 x 9
5	allen screw DIN 912 M5x16
6	connection bracket
7	washer DN 6,4
8	allen screw DIN 912 M6 x 50
9	aluminium washer
10	nut M6
11	safety nut M8



During re-assembly, the air inlet cans and the connection bracket are installed using new Allen screws M6 x 50 (8). Securing the nuts is done by welding again. During re-installation of the burner onto the swivel joint, the attachment screws (1) are fixed first to the connection bracket and are tightened so that the burner can still be swivelled easily. Then they are secured using the Allen screws (5) which have Loctite® 243 applied.

B C D

If after some time the burner can be swivelled too easily, the burner can be adjusted as follows:

1) Burner with mechanical height adjustment:

   First the Allen screw (5) is to be removed. Then re-tighten the attachment screw (1) and re-secure with Allen screw (5). Subsequently, the Allen screws M5 x 16 are removed from the swivel joint. Now the Allen screws M8 x 45 can be re-tightened and re-secured with Allen screws M5 x 16.

2) Burner with height adjustment by gas spring strut:

   At the cross gimbal are two grub screws with Allen inserts which can be re-tightened.

B C D



4.4.13. Replacement of burner hoses

Burner hoses are life-limited parts which must be replaced every 10 years. The date stamped on the crimped hose sleeve of the coupling at the fuel cylinder end of the hose is definitive. The hoses are only to be sourced as original items from the manufacturer. The crimped hose sleeve pictured on this page shows the date of manufacture, in this case '10.11' which stands for August 2011.

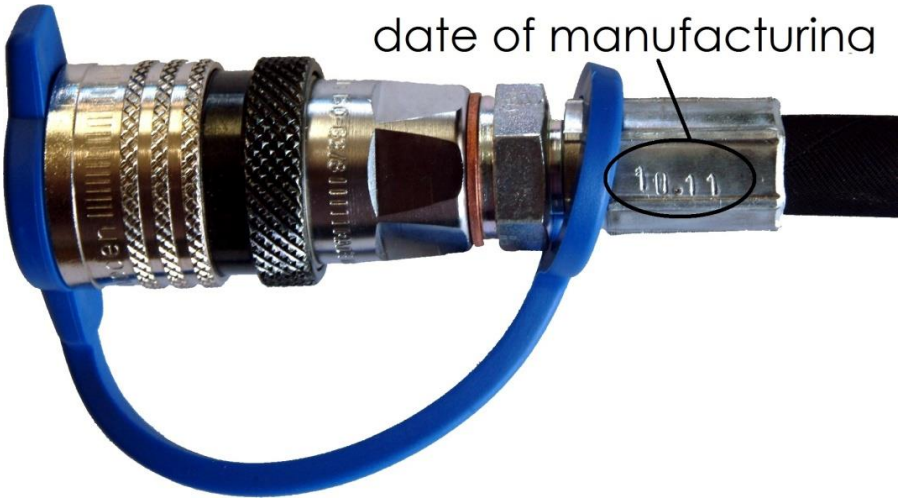

pic.4-27: Date of manufacturing

To replace the burner hoses, the old hoses are unscrewed from the burner and replaced by new hoses. Prior to installation, the Teflon®-tape is to be removed and both threads are to be cleaned. As this is a tapered NPT-thread, it is to be ensured that the new hose is not fitted too tight during installation as otherwise the thread may be damaged. When using sealing tape, it is always to be wound counter to the direction of the thread. The first turn of the thread is to remain free of tape. Five to seven layers of tape are recommended. Two connection systems Tema and Rego are available for hoses supplying liquefied gas.

To remove the Tema-connector from the hose, the fitting is to be heated to 70 °C using a hot air fan. Then the threads are cleaned using brake cleaner, the new hose is fitted and Loctite® 270 is applied. The Rego-connector is fitted with a tapered NPT-thread. If an adhesive has been used, the same procedure as for the Tema-connector is to be followed. If the connector has been sealed with Teflon® tape, the same procedure as for replacing burner hoses is to be followed.

B C D



Burner hoses are to be treated with special care as they are part of the fuel system. If the hoses are damaged in such a way that the metal underneath the rubber is visible, they must be replaced entirely without delay. When the burner hoses are coiled-up, it is to be ensured that a minimum bend radius is not below 10 cm. In order to avoid accelerated ageing, the burner hoses are to be protected from UV-radiation. Also, regular application of silicone spray is recommended to retain the flexibility of the hoses.

A B C D

4.4.14. Procedures following incidents or specific occurrences

Type of occurrence	Actions
Contact with power lines	Inspection by the manufacturer is required. If the contact was only between the power line and envelope fabric and if there is no temperature sensor cable is installed, the requirement for an inspection may be relinquished following feedback from the maintenance organisation or the manufacturer respectively. D
Burner subjected to hard impact due to being dropped or knocked against an obstacle during transport (e.g. low bridge)	Inspection by the manufacturer is required. D
Pilot light failure	Inspection of fuel flow and correct regulator settings: increase or decrease of pressure if required. Cleaning of jets, if required. Check if nitrogen is inside the fuel cylinder by checking pressure and temperature. A connector not properly fitted could also be the case. A B C D
Blockage of liquid fuel flow In rare cases water can enter the fuel cylinder during refuelling. The water can freeze due to evaporation heat in the narrow passages of the blast valve or the fittings especially in winter but also in summer. In this case a blockage at the bottom of the liquid dip tube is also possible in winter.	The fuel cylinder connected to the burner not being supplied with fuel is to be tipped 45°, after release of the upper cylinder strap. Then the inlet of the liquid dip tube is outside of the water accumulation. Following that an emergency landing is to be instigated. Prior to landing, all cylinder straps are to be fitted. The pressure gauge is indicating whether the blockage is located in the cylinder or in the burner valve. No pressure indication means the blockage is located in the cylinder or the hose fitting. A B C D Prior to the next flight, the burner, including the cylinders, are to be checked by the manufacturer. It is required that the fuel cylinders and all fuel supplying parts up to the burner jets are dry. D

tab.4-1: Procedures following incidents or specific occurrences



4.5. 100-hours- or annual inspection

4.5.1. Inspection criteria

The following checks are to be performed every 12 months or after 100 operating hours within the scope of the 100-hour inspection, whichever occurs first.

Carabiners

- Check karabiners for corrosion and damages check karabiner lock for faultless and easy operation.

Support rods

- Check support rods for bending and damages

Burner frame

- Check burner frame for distortion and cracks, especially at the karabiner attachment points

Burner can

- Check the burner visually: burner can with no fire damage

Piezo-igniter

- Test function of Piezo igniter

Pilot light

- Check functioning and appearance of pilot light. Establish whether the distance between pilot light electrode and pilot light body is approx. 3 mm. Check good ignition spark.

Burner jet holes

- Check for residue in jet holes

Take-off-, Start- and Silent-burner

- Check functioning and appearance of liquid burners (main -, take-off - and whisper burner)

Overflow tube M5

- Check leakage pipe (grub screw M5) for fuel leaks.

Burner coils

- Check burner coils for cracks and other damages

Operating handle

- Re-tighten the attachment screw of the handle bar.

Pressure gauge

- Check zero position of pressure gauge

Gas hoses

- Check fuel hoses for life expectancy (10 years), mechanical damages, ageing, chafing and check correct marking. If the hoses have kink protectors fitted, pull the sleeve back to check the hose fitting.
- check hose couplings on the fuel cylinder side



4.5.2. Fault tolerances

Type of fault	Tolerance
Ease of operation of the karabiner lock and nut. Any damages on the lock, joint and pin	None
Corrosion of the karabiner	Discolouration of the surface only and slight surface rust build-up
Cracks and grooves on the karabiner body	None
Signs of wear on the karabiner body	Slight signs of wear.
Distortion of the burner housing (sheet metal parts)	No dents or bulges. Small crack in the lower burner can up to 20 mm.
Cracks on the upper air inlet can	None
Bending of burner support rods	Slight bending
Distortion of the burner frame	None
Distortion of the inner swivel frame	Slight distortion of up to 20 mm
Cracks and grooves in the entire burner frame and swivel frame	None
Distortion, cracks or grooves in the burner swivel frame ('continuous adjustment' option)	none
Burner is too easily gimballed in the swivel joints	The gimbal movements must not be too easily. The burner must not freely swivel about
Malfunction of Piezo igniter	none
Non-typical appearance of the pilot light flame or unstable flame	none
Difficult operation of blast valve lever (e.g. if the grub screw of the operating lever has become loose and is chafing against the housing)	none
Any damages to fittings and connectors	None
Any leaks during the burner test	none
Fuel discharge via the leakage pipe in the burner can (leaking fuel from the burner valve)	none

tab.4-2: Fault tolerances



Type of fault	**Tolerance**
Cracks, grooves or dents on the burner coils	None
Dis-positioned zero setting of the pressure gauge needle	Acceptable up to 0.5 bar; if above: overhaul or replacement required.
Fuel hoses older than 10 years	none
Damages to fuel hoses or porosity or dents	None
Slight signs of chafing on hoses	In this case, the condition of the liquid fuel hose is to be especially considered, as this hose poses a greater risk. Very slight chafing e.g. from the parachute line is acceptable. The metal mesh must not be visible under no circumstances.

tab.4-3: Fault tolerances



5. Basket maintenance and repair

5.1. General

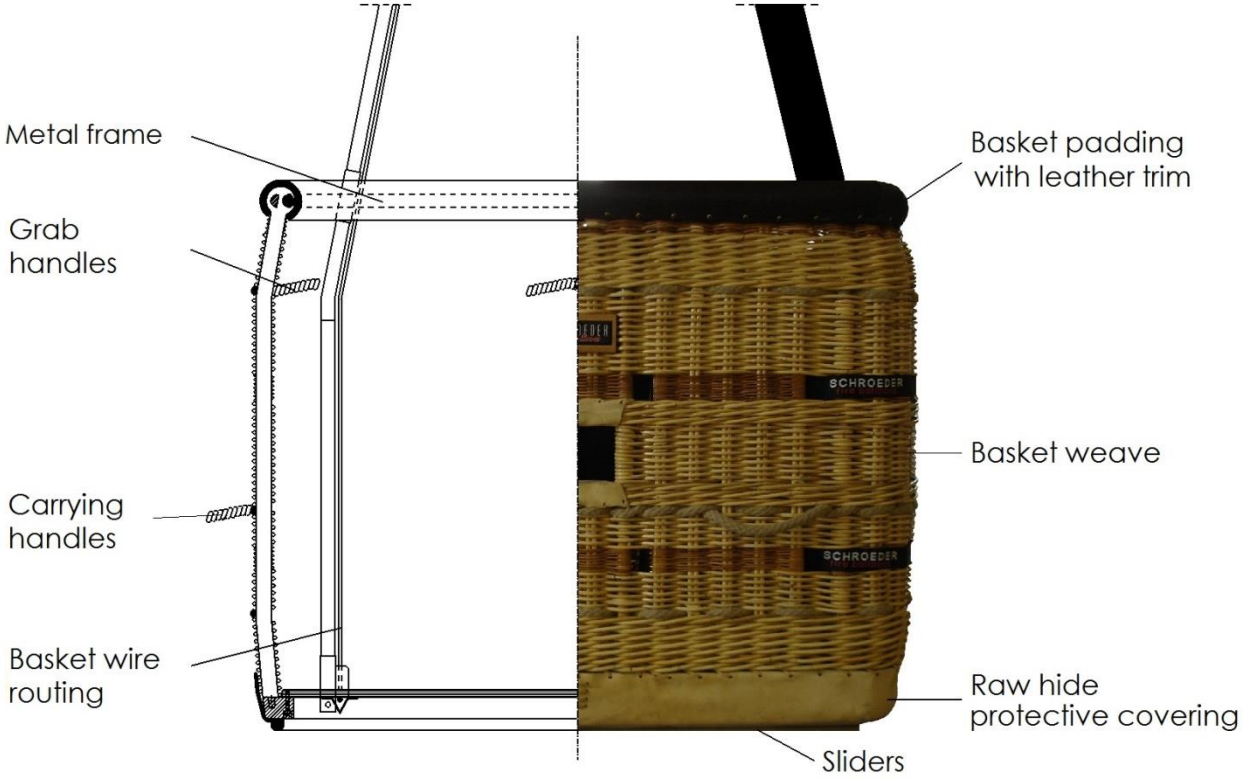

pic.5-1: Basket design

The correct care of a balloon basket is having significant influence on the increase of its life. Baskets are best cleaned with clean water without additives and if required by using a pressure washer. After that it is of utmost importance that the basket is vented from all sides and therefore dried well. In general, dry storage with good ventilation is always to be ensured as the basket is mainly made from natural materials! Especially when storing the basket inside a trailer, in particular in winter when the basket is stored there for longer periods, is it important to ensure good ventilation by e.g. installing sliding rods on the floor of the trailer (recommendation by the manufacturer). Optionally, the rattan weave may be treated with a breathable varnish after cleaning to protect the basket.

A B C D

If a basket needs to be mended or repaired, it is always recommended to have this performed by the manufacturer or a maintenance organisation authorised by the manufacturer in order to ensure a duly repair. Maintenance activities and repairs, which do not impede the airworthiness of the basket, may be carried out by the owner or a knowledgeable person (leather or raw hide, basket weave and basket floor up to the tolerance threshold and carrying handles (sections 5.3 and 5.4.2)). Repairs which impact the load-bearing structure of the basket are to be performed by the manufacturer or a maintenance organisation (e.g. basket wires, basket frame, metal top frame, handles as well as floor and basket weave above tolerance threshold) without exception.

C D



5.2. Repair procedures

5.2.1. Basket weave

The balloon basket is made of rattan weave. This material becomes rigid due to the weaving technique and remains flexible to some degree. Care and cleaning of the basket weave may be performed by the owner as specified in 3.1.

A B C D

Damages in the weave larger than 5 cm in both directions are to be repaired by weaving-in new wicker pieces.

C D

5.2.2. Basket floor

Damages like cracks or holes in the basket floor or the replacement and the modification of the basket base plate using screws or glue are only to be performed by the manufacturer or a maintenance organisation recommended by the manufacturer with appropriate authorisation.

Cracks larger than 20 cm or holes of maximum 5 cm diameter are best repaired by gluing-on laminated multiplex board of equal thickness after consultation with the manufacturer. If the basket floor is showing more extensive damages or if a crack is visible from both sides, the entire basket floor is to be replaced. When partly or completely replacing the floor, the number and total cross section area of the drain holes must not be altered. The manufacturer recommends in all cases a complete replacement of the basket base plate.

The replacement of the basket base plate is done as follows:
First, the aluminium protective strips are removed from the basket base plate and the sliding runners (nylon runners) are removed from the frame. Then the M6 nuts of the attachment bolts (coach bolts) are un-screwed and the basket base plate is removed. A new basket base plate is inserted into the basket from above and its position adjusted. The board is fixed in place and new holes are drilled into the basket base plate by using the existing holes in the frame. New coach bolts are inserted into the basket base plate by using a hammer and fixed with self-locking nuts. The thread of the coach bolts should be slightly greased beforehand to aid installation of the nut. Now the aluminium protective strips can be attached to the basket base plate and the sliding runners can be attached to the frame.

C D

5.2.3. Load bearing wooden frame (basket frame)

The basket frame is the load bearing component of the basket in the lower section. The weave, as well as the basket wires, are attached to the frame. The components are made from hard-wearing glued-laminated timber bars. As the wood would be stressed heavily, the frame is covered with raw hide, the so-called abrading hide. If the frame shows signs of heavy wear and abrasion due to missing or damaged hide, or even indicates weakening due to permanent moisture, the affected parts of the frame must be replaced. This can only be performed by the manufacturer due to the complex construction.

D

5.2.4. Sliding runner

Sliding runners made of polyamide are attached to the wooden frame and the floor struts with stainless steel screws (Spax® screws as counter sunk screws). These sliding runners are on one hand for protection of the basket floor, on the other hand a very much easier loading and un-loading can be achieved by installing the same runners in the trailer. Furthermore, sliding runners permanently installed in the trailer ensure good ventilation of the basket floor from underneath (recommendation by the manufacturer – see also section 5.1). If the sliding runners are heavily worn, they can be replaced by the owner or a knowledgeable person. It is to be ensured that the head of the screws is completely sunk-in into the runner and therefore does not provide an obstacle for sliding. Sliding runners may be sourced from the manufacturer cut to the correct length of the basket.

A B C D



5.2.5. Metal frame

A stainless steel frame is attached to the weave and forms its upper end. In the four corners of the metal frame, sleeves are welded-on to accommodate the burner support rods. Is the metal frame heavily distorted or even broken, a repair is only to be performed by the manufacturer using hydraulic clamps or welding.

D

5.2.6. Stainless stelel basket wires

Stainless steel basket wires are routed vertically through the weave and underneath the basket floor which consist of a single piece with no joints. Thimbles are fitted into the wire assemblies with ferrules secured by the Nicopress® process and which accommodate the karabiners. A maximum of three damaged wire strands are acceptable at the thimbles. Larger damages to the wire require the replacement of the entire wire. Only original items sourced from the manufacturer must be used.

D

5.2.7. Basket wire routing

Die im Geflecht eingearbeiteten Führungsrohre für die Korbseile sind nur vom Hersteller zu reparieren oder im Bedarfsfall auszutauschen.

D

The aluminium protective strip located underneath the basket floor and through which the steel wire is routed, may be replaced by the owner in case it is damaged.

A B C D

5.2.8. Basket padding and leather trim of basket top

The upper circumferential metal frame is covered with a thick padding material (Climaflex®) with a leather trim on top. Both materials may be repaired or replaced by the owner. The leather may, the padding material Climaflex® must be sourced from Schroeder fire balloons. The suppleness of the upper leather trim can be retained with a leather care product.

A B C D

5.2.9. Raw hide covering at basket bottom

The covering of very robust raw hide is the outside edge protection of the basket floor. Tears and damages to the leather occur as these areas are subject to high strain due to many landings. These should be attended to as soon as practicable, as dirt and water can ingress underneath the leather and damage the basket floor as well as the weave (rotting due to moisture). Repairs or replacement of the raw hide may be carried out by the owner.

A B C D

5.2.10. Rope handles

A circumferential rope is integrated into the weave in the upper and lower part of the basket, with grab handles on the inside of the basket in the upper part and on the outside of the basket in the lower part. Should these handles or the rope woven into the basket be damaged in such a way that 25% of the rope strands are cut, the entire rope requires replacement by the manufacturer or a maintenance organisation recommended by the manufacturer with appropriate authorisation.

C D

5.2.11. Plastic handles

Optionally, grab handles made out of plastic can be installed instead of the woven-in rope handles in the upper part of the basket. These handles are to be installed by the manufacturer.

D



5.2.12. Take-off aid and take-off rope

The take-off aid is integrated into the basket weave. It consists of 4 take-off rope attachments, an attachment ring, a karabiner, a rated break link if required, a safety catch and the take-off rope. In case of damage to any of the take-off attachments (rope spliss, damage to the thimble), it is to be replaced completely. **C D**

The attachment ring, the karabiner for the pre-safety, the rated break link (breaking load 850 daN) and the safety catch (snap shackle) are to be replaced against new when damaged. **A B C D**

The take-off rope, approx. 5 m long, is spliced at one end in that way that two loops are present approx. 20 cm apart. Is the take-off rope damaged or even cut, it is to be replaced by a new original rope. **A B C D**



pic.5-2: take-off aid

5.2.13. Quick release system attached to burner frame or envelope karabiners

The quick release can also be attached to the burner frame. Two rings must be welded to the frame at Schroeder fire balloons for the attachment of the system. The assembly of the quick release system is illustrated in pic.5-3: . The starting rope can also be joined with the sling belt for the start, using a big 25 kN aluminium karabiner with two locking methods. The system can also be attached to the envelope karabiners for envelope sizes up to and including 3400 m³. The system must be joined in a separate quick link with a min. strength of 25 kN for the attachment to the envelope karabiners. The system is assembled as can be seen in picture pic.5-3: .The starting rope has a maximum length of 4 m. The sling belt to the burner frame is equipped with an eyelet. The sling is sewn together on the quick release side so that the eyelet is always on a defined distance to the quick release. A snubber can additionally be installed to the starting rope as can be seen in pic.5-2: The snubber is recommended for envelopes with a volume of 6000 m³ and more.
Any deformed or damaged part must be exchanged. If the rated break point fails, the sling, the sheets of the break point and the safety sling must be replaced.

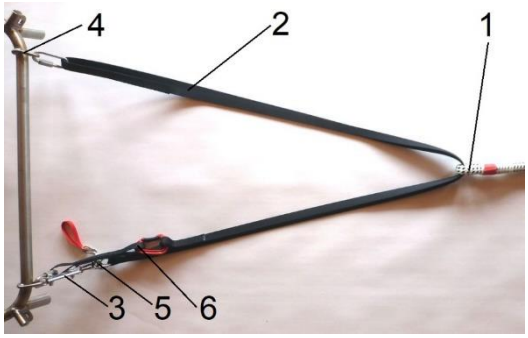

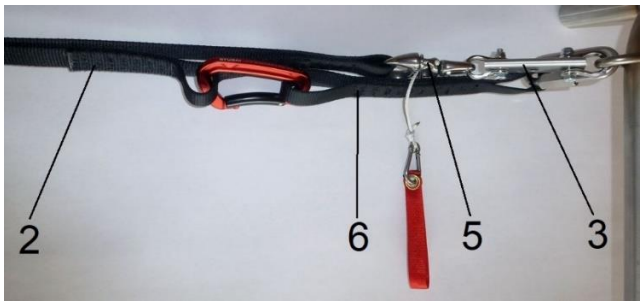

pic.5-3: Quick release for burner frames

1) Starting rope with Nylon-thimble max. length 4 m Item: K1 000 015
2) Sling belt with attached eye min.1,5 m – 2 m Item: K1 000 016
3) Rated break point 800 kg +-50 kg (Tost) Item: K1 111 018
4) Ring for welding attachment
5) Quick release coupling Item: K1 067 010
6) Safety sling of appr. 0,3 m Item: K1 000 017

5.2.14. Burner support rods

The four burner support rods made out of polyamide provide a loose connection between burner and basket. With time, the nylon can fatigue or even break. In both cases, the support rods are to be replaced. Correct length of the rods is to be ensured. Burner support rods cut to the respective length may be sourced from the manufacturer.

A B C D

5.2.15. Cylinder attachments (straps)

If the straps, used for securing the cylinders in the basket, are damaged in any way, they are to be replaced without exception. Original straps are to be ordered from the manufacturer.

A B C D

5.3. Procedures following incidents or specific occurrences

Type of occurrence	Actions
Basket stored wet for prolonged time Basket floor not ventilated from below Rot due to moisture	Replacement of base plate and the affected weave. **C D**
Basket deformed following heavy landing	Inspection by the manufacturer or by a maintenance organisation recommended by the manufacturer, re-aligning of deformed frame **C D** Welding of broken frame (manufacturer only) **D**
Crack or hole in basket floor following landing on pointy object (post, pole, etc.)	Depending on damage, repair or replacement of basket base plate **C D**
Contact with power lines	Inspection of basket wires and basket frame by the manufacturer is required. If the contact has only been made with the envelope fabric and no temperature sensor cable is installed, an inspection may be waived following consultation with the maintenance organisation or manufacturer respectively. **D**

tab.5-1: Procedures following incidents or specific occurrences



5.4. 100-hours- or annual inspection

5.4.1. Inspection criteria

The following checks are to be performed every 12 months or after 100 operating hours within the scope of the 100-hour inspection, whichever occurs first. The following is to be checked:

Weave
- Check for cracks, especially at the joint to the lower basket frame, and holes

Floor
- Check for cracks and existing holes

Wooden frame
- Check for cracks and breaks as well as the joint to the weave

Sliding runners
- Check attachment screws and wear and abrasion

Type plate
- Check existence and correct data stated

Carrying handles
- Check for damages

Grab handles
- Check for damages and secure attachment

Cylinder straps
- Check buckle and strap for damages and distortion or deformation

Padding and leather
- Check padding for firmness and damages, Check attachment of leather

Raw hide
- Check correct attachment to the frame and weave; tears and holes should not be present.

Basket wires
- Check basket wires for correct length, kinks, breakages or distortion or deformation.

Basket top frame
- Check for cracks or distortion or deformation.

Take-off aid and take-off rope
- Check secure attachment to basket, rated break link, carabiner and take-off rope for presence and damages.
- Check quick release and trigger cord for damages
- For burner frame quick release check sling belt and safety sling



5.4.2. Fault tolerances

Type of fault	Tolerance
Damages to the weave	5 cm tolerance in all directions, above that weaving-in of new wicker pieces.
Damages to the basket floor	Cracks not larger than 20 cm and visible from only one side; holes not larger than 3 cm in diameter and not more that 3 holes in total.
Stainless steel basket wires	Damage to max. Three individual strands, otherwise replacement of the affected wire required.
Damages to take-off aid, take-off rope, sling belt or safety sling	None
Damages to cylinder straps	None
Distortion to burner support rods	Slight distortion

tab.5-2: Fault tolerances



6. Fuel Cylinder repair and maintenance instructions

6.1. General

Independent of the type of fuel cylinder, utmost care is required when handling these components. In principle, a cylinder must never be used without padding.
Regular inspection and maintenance is essential to prevent leakages. Especially, the fittings and couplings are always to be kept clean.
The fuel cylinder is to be subjected to regular visual inspections by the pilot or owner independent of subsequent inspections periods.

The following risks may occur, among others:

- Contamination by re-filling with dirty fuel which could lead to blockage of the pilot light.
- Remains of water after water pressure test: A thorough drying is required following pressure testing as water droplets can block burner valves and cylinder valves due to build-up of ice (evaporation heat).
- Damage of burner fittings, especially of protruding parts as quick-couplings of the pilot light at the vapour take-off valve when removing the cylinder padding. If the cylinder is up-side-down, the couplings must not touch the ground.
- Only original parts e.g. seals from Schroeder fire balloons must be used to avoid leakages.

Procedure to rinse fuel cylinders:

Complete emptying with subsequent rinsing using nitrogen or other non-flammable gas.
The cylinder is to be filled with nitrogen up to approximately 2 bar and then to be emptied using the burner. Repeat this procedure until the vented gas does no longer burn. Subsequently, all valves to be closed.
.

6.2. Repair procedures

6.2.1. General

Utmost cleanliness is to be observed at all repairs involving components of the fuel system. Only original parts must be used. This also applies to seals. When using 0.1 mm Teflon®-tape certified by DVGW (German Technical & Scientific Association for Gas & Water), it is always to be wound counter to the direction of the thread. The first turn of the thread is to remain free of sealing tape. Five to seven layers are recommended.

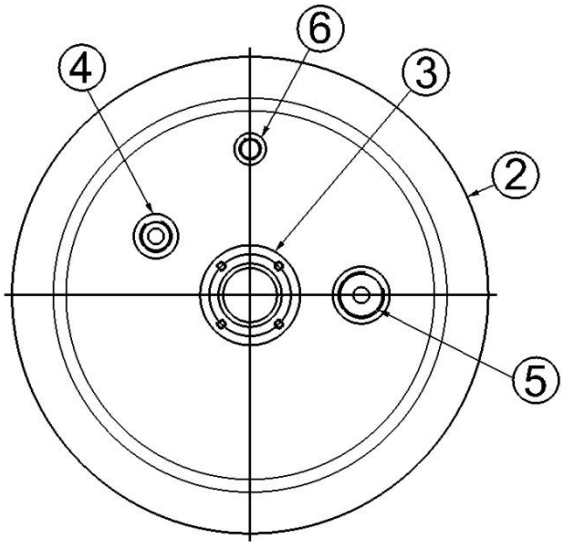

pic.6-1: Top view drawing

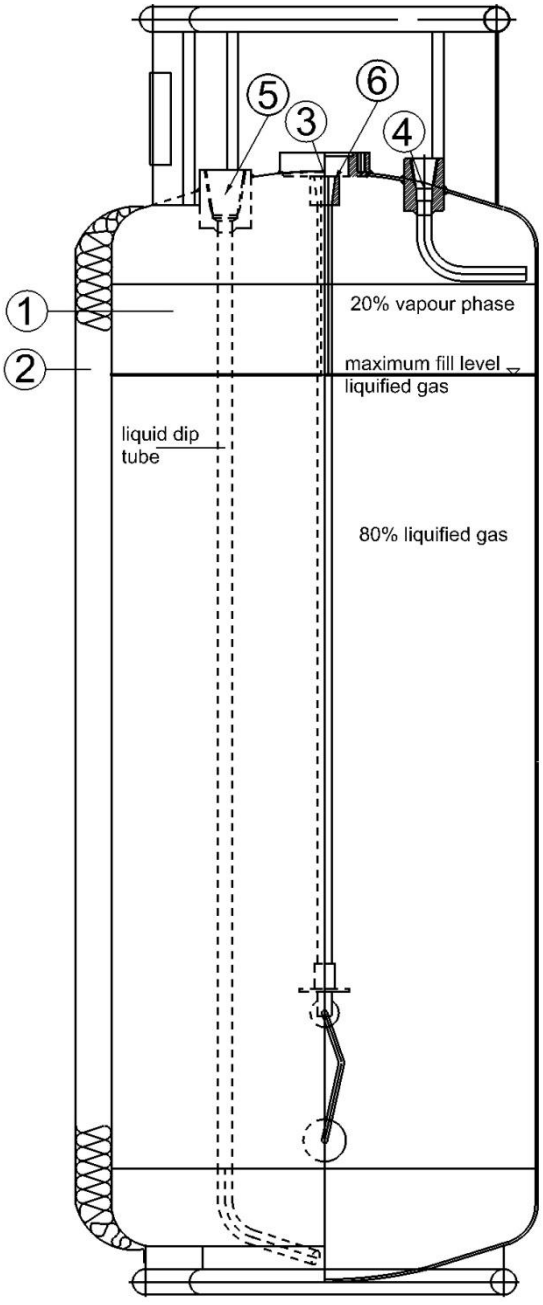

pic.6-2: Side view drawing

No.	Title
1	steel body
2	protective padding
3	fill level gauge
4	vapour take-off valve (master cylinder)
5	liquid take-off and re-fill valve
6	fixed liquid level gauge / bleed valve

It is to be ensured that the cylinder is completely empty and no flammable gas mixtures are present prior to removal of fittings. Take care that no Teflon®-tape residue is falling into the cylinder when unscrewing fittings (blockage of jets and check valves). Remove fill level gauge for subsequent cylinder inspection. Use no more than required when applying thread locking compound (Loctite®) so that noting enters the fittings.

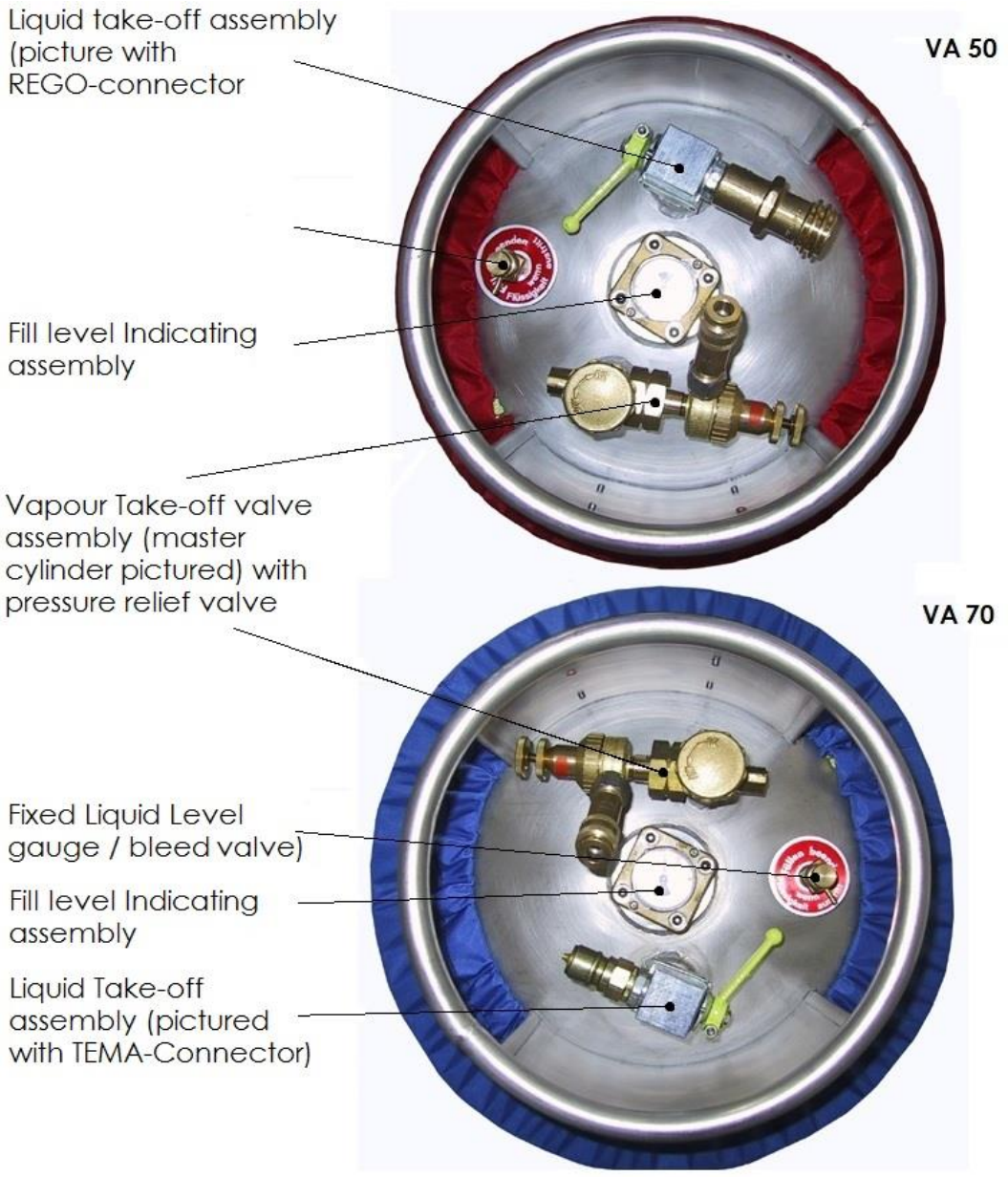

pic.6-3: top view of VA 50 and VA 70

6.2.2. Replacement of cylinder padding

In order to replace the cylinder padding or the fabric cover, the cylinder needs to be placed up-side down. Prior to that, it is important to check that no fittings protrude above the cylinder guard ring. The cylinder must only be placed on smooth ground so that no fitting is damaged. Subsequently, the cover together with the padding is removed. Before fitting a new padding, the surface should be coated thinly with low friction agent (e.g. silicone).

6.2.3. Replacement of pressure regulator

A B C D

The pressure regulator unit is fitted to the vapour take-off valve instead of a blanking plug. When replacing the pressure regulator it is to be noted, that the coupling to the hose may have a left hand or right hand thread (female connector with groove: left hand thread, female connector without groove: right hand groove). The thread of the connector to the valve is always a left hand thread. From experience, the seal often remains inside the female connector, when unscrewing the pressure regulator. This seal must be replaced. Removal of the seal often requires disassembly of the pressure regulator.

C D



pic.6-4: Level gauge/bleed valve (including hose connection)

No.	Title
1	Level gauge
2	coupling
3	insert connector
4	PE-hose, 4x1



pic.6-5: Level gauge/bleed valve (standard)

No.	Title
1	Level gauge (Standard)

When replacing the fixed liquid level gauge, take care not to damage the brass body by over-tightening (tightening torque minimum 28 Nm to maximum 50 Nm). Furthermore, the vapour outlet is to be directed towards the opening in the cylinder guard. Subsequently, seal connections using 0.1 mm Teflon®-tape certified by DVGW (German Technical & Scientific Association for Gas & Water). The visible pipe length of the bleed valves dip tube for VA 50 and VA 70 is the same. The length is 170 mm.

C D

6.2.4. Fill level gauge assembly



pic.6-6: **Fill level gauge**

In addition to the instructions made in the preliminary notes, the following is to be observed:

After removal of the screws, the gauge is then removed upwards until the float becomes visible.
Then the wire of the float is twisted approx. 45° around the gear and the part is then removed completely through the cylinder opening. A visual inspection of the teeth of the gear and the plastic stop is to be carried-out.

Fit a new seal prior to re-installation, then insert the float in the rotated 45°-position through the opening of the fuel cylinder.
The float is to be returned to its original position at the wire catch prior to re-installation. Ensure correct installation position when bolting the fill level gauge. The word 'top' on the brass flange must be in the direction of the vapour take-off or safety valve.
The old screws are re-installed and tightened diagonally so that the gauge is seated parallel to the flange. The tightening torque is 10 Nm.

C D

No.	Title
1	Allen screw, stainless steel A2; DIN 912
2	fill level gauge
3	flat seal

6.2.5. Liquid take-off assembly

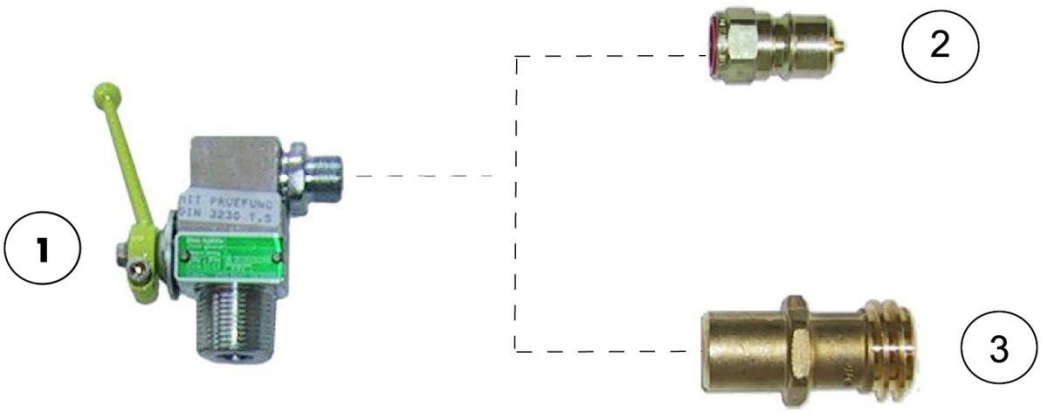

pic.6-7: Liquid take-off valve

No.	Title
1	ball valve ¾´´
2	Tema-coupling
3	Rego-coupling

For maintenance see section 6.5

6.2.6. Vapour take-off assembly with pressure regulator System Lorch

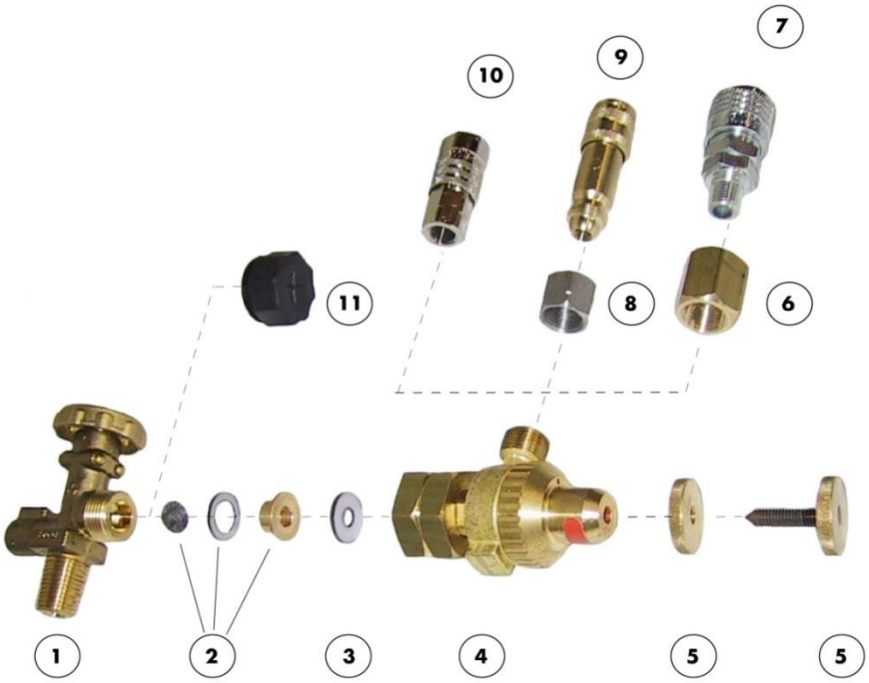

pic.6-8: Vapour take-off assembly with pressure regulator

No.	Title
1	vapour take-off valve
2	adaption kit (filter and flow reducer)
3	seal
4	pressure regulator, System Lorch
5	knurled head screw (2 parts)
6	adapter for Dynaquip-coupling
7	Dynaquip-coupling (System Cameron)
8	adapter (stainless steel) for Lorch-coupling
9	Lorch-coupling
10	Tema 1300-coupling
11	protection cap

For maintenance see section 6.5

6.2.7. Vapour take-off assembly with pressure regulator System fb type:GR 1

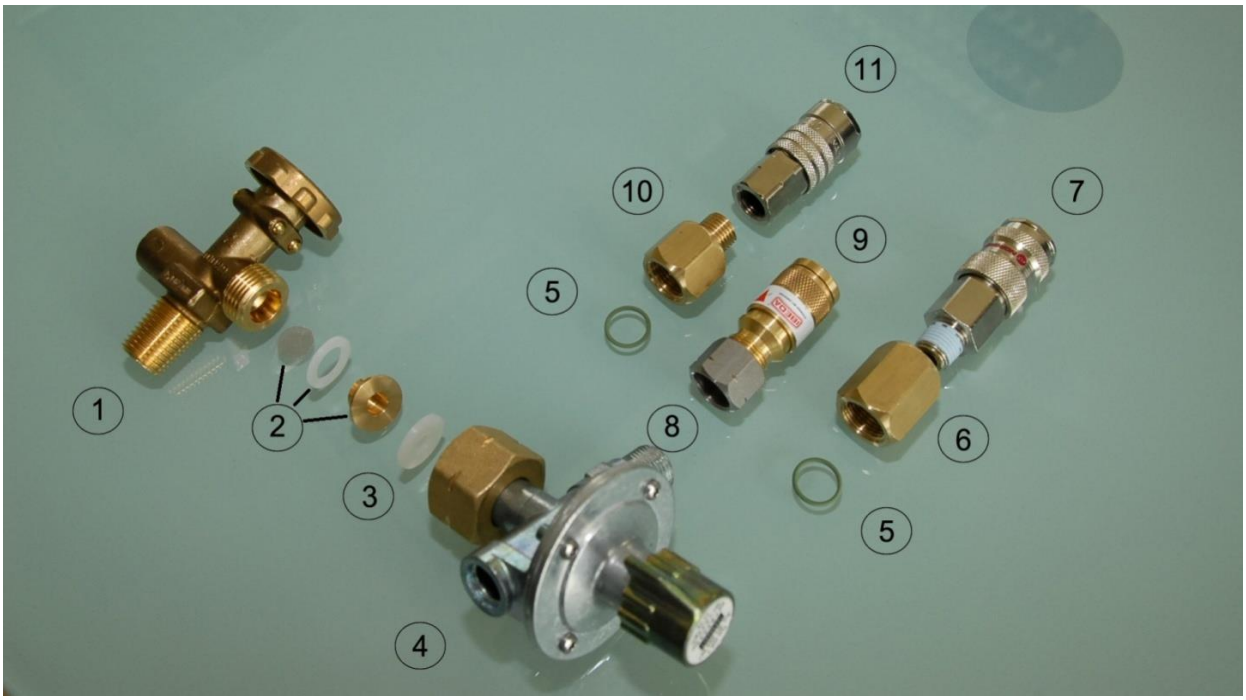

pic.6-9: Vapour take-off assembly with pressure regulator System Schroeder

No.	Title
1	vapour take-off valve
2	adaption kit (filter and flow reducer)
3	seal
4	pressure regulator, System Lorch
5	O-ring seal)
6	adapter for Dynaquip-coupling
7	Dynaquip-coupling (System Cameron)
8	adapter (stainless steel) for Lorch-coupling
9	Lorch-coupling
10	adapter for Tema 1300-coupling
11	Tema 1300-coupling

For maintenance see section 6.5

6.2.8. Ball valve assembly

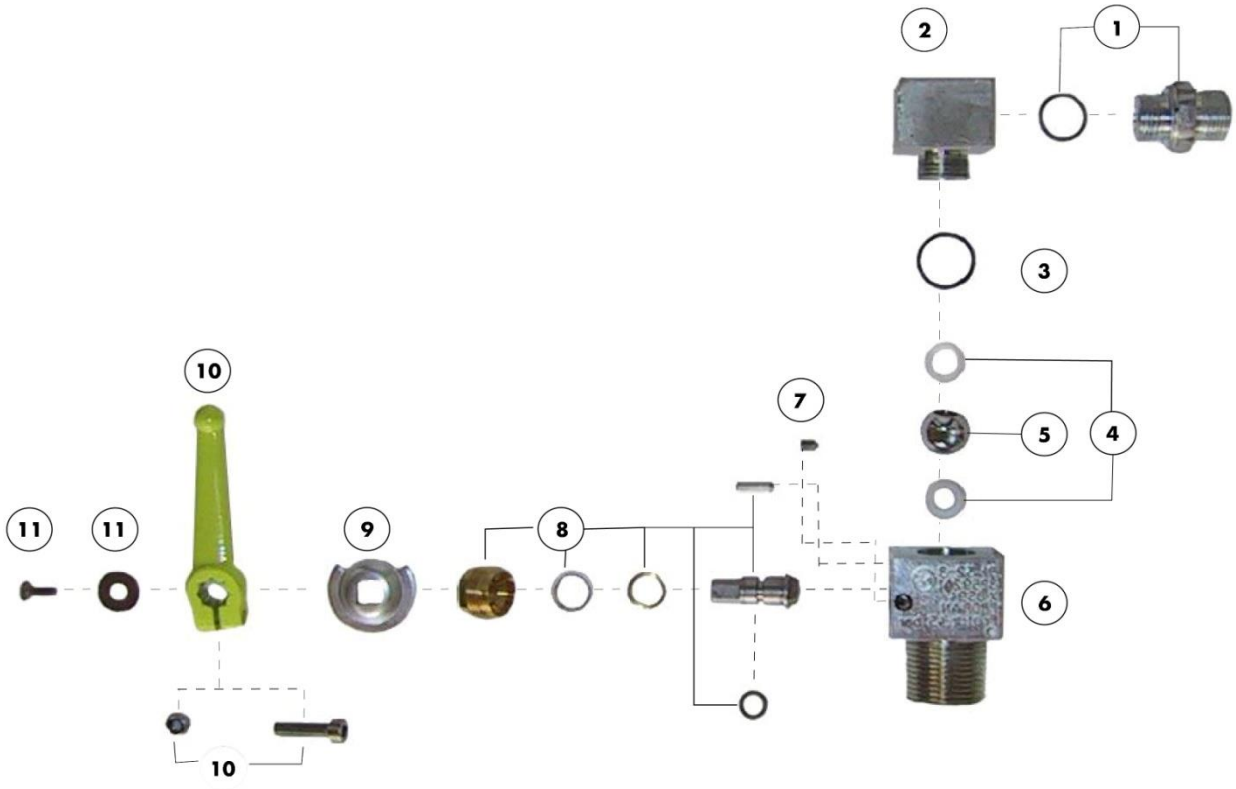

pic.6-10: ball valve assembly

No.	Title
1	double nipple and O-Ring
2	upper body
3	O-ring seal
4	Teflon® sealing kit
5	ball
6	lower body
7	grub screw
8	brass bush and spindle
9	stop bracket
10	operating handle with fixing bolt and nut
11	hex head cap screw and penny washer

For maintenance see section 6.5



6.3. Procedures following incidents or specific occurrences

Type of occurrence	Actions
Cylinder falling over onto hard object or cylinder being subjected to forces in other circumstances	Remove protective padding and visual inspection of the cylinder. Consult the manufacturer when damages are visible. **A B C D**
Incident involving contact with power lines	Extensive Inspection as per 100-hour / annual inspection respectively. **C D**
Expiry of the 25 year life for VA50 and VA70 manufactured prior to 01. July 2004	Re-evaluation as required by the certificate from the manufacturer Schroeder fire balloons (demonstration of ADR-conformity / π-marking) including replacement of fittings i.e. safety valve, bleed valve, ball valve with π-marking etc.. To be carried-out by the manufacturer only in conjunction with a technical inspection organisation with official authorisation (e.g. TÜV). However, it is recommended to initiate this re-evaluation at the first or second 10-year inspection. After that, the fuel cylinder has no life limitation. **D**
Blocked burner jets and pilot light jets due to residue in the cylinder. Sometimes amounts of rust particles and other contaminations enter the fuel cylinders during re-filling from older fuel tanks. Most likely is the contamination when re-filling from large domestic tanks into balloon fuel cylinders as it is practised now and then during events.	Empty and clean the fuel cylinder and its fittings by the manufacturer. **C D**
Transport via air freight	Complete emptying of cylinders with subsequent rinsing with nitrogen or other non-flammable gasses. For that, pressurise the cylinder with nitrogen up to 2 bar and empty using the burner. Repeat this process until the gas does no longer burn. Then close valves. **A B C D**
Repeated failure of the pilot light	When feeding out of the vapour phase, adjust the pressure regulator to the correct pressure (depending on burner type). **A B C D**

tab.6-1: Procedures following incidents or specific occurrences



6.4. 100-hours or annual inspection

6.4.1. Inspection criteria

The following checks are to be performed every 12 months or after 100 operating hours within the scope of the 100-hour inspection, whichever occurs first. In addition to that, every fuel cylinder is to be subjected to a pressurized fuel cylinder inspection every 10 years.

The inspection of the fuel cylinders at the 100-hour or annual inspection contains the following checks:

Generell:

- Thorough visual inspection for dents, deep gouges , corrosion, valves and fittings

Pressure regulator

- Check pressure regulator for secure installation and re-tighten the union nut if required. The connector must not protrude above the cylinder guard ring.

Protective padding

- Visual inspection of protective padding for holes, tears and padding damages.

Type plate

- Visual inspection of the plate for readability and completeness

Fill level indicator

- Re-tightening of the bolts of the fill level gauge.

Gas tightness of the fittings

- Position operating lever of ball valve in 45° position and apply leak detection spray to entire valve. Check the remaining fittings the usual way with leak detection spray. After that vent check valves of couplings.

Rego-Adapter

- Check visible seals at REGO-adapter for damages and replace if required.

Couplings connectors and visible seals

- Apply appropriate low friction agent (e.g. silicone spray) to all couplings and visible seals.



6.4.2. Fault tolerances

Type of fault	Tolerance
Slight indentations in the cylinder body including top and bottom dome	The indentation must not be deeper than 25% of its diameter and must not feature sharp edges.
Sharp-edged indentations	None
Gouges	The depth of the gouge must not exceed 0.2 mm. In reality it is difficult to establish this value. If in doubt consult with manufacturer. The following can be used as a guideline: The depth of the gouge is at least 0.1 to 0.2 mm if the damages can be detected with the fingernail.
Deformation of the bottom cylinder guard ring	If the bottom guard ring has been distorted by excessive force, so that secure protection of the cylinder base cannot be guaranteed anymore. The base of the cylinder must not be in contact with the even floor.
Deformation of the upper cylinder guard ring	The deformation must not impede the operability of the fittings and couplings. No part of the fittings and couplings must project above the cylinder guard ring.
Rust build-up	The cylinder is to be handed to the manufacturer at significant rust build-up. Slight build-up of rust on the surface may be removed by polishing. It is to be ensured that only polishing and care agents are used that are intended for stainless steel. If, at a previous occasion, a different material has been treated with the polishing tool (e.g. scouring sponge), it may get embedded into the surface and may cause further corrosion.
Any leakage	None
Any damage or modification of the fittings	None
Ease of operation of the fill level gauge	None
Damages to protective padding and fabric cover	The minimum requirement is that the insulating layer must protect the cylinder against impact and notch effects. Whether the fabric cover requires replacement may be decided by the owner alone, as its purpose is only for appearance.

tab.6-2: Fault tolerance



6.5. 10-years inspection of fuel cylinders VA 50 and VA 70

Step 1

- Remove protective cover
- Inspect cylinder body for damages. The cylinder must not be approved for inspection and further use when sharp indentations and clearly visible bulges are present.
- Empty the fuel cylinder **ensuring that the instructions for the safe handling of liquefied gas are obeyed.**
- Remove fill level gauge
- Remove bleed valve
- Replace TEMA 3800 male coupling if necessary.
- Rego male coupling, replace flat seal and o-ring, check function of check valve
- Remove safety valve
- Remove Ceodeux liquid take-off valve, if still fitted. (Replace with ball valve)
- If a ball valve is fitted, it may not be removed.
- Remove all Teflon®-tape residue from the thread.

Step 2

- Fit new bleed valve (recommendation)
- Screw blanking plug onto thread for safety valve
- Fit blanking flange with integrated vent valve on opening for fill level gauge.
- Maintenance of ball valve
  - Remove yellow operating lever
  - Remove safety screw at the side of the valve body
  - Remove stop pin
  - Unscrew the seal unit using special tooling (available from manufacturer Schroeder fire balloons
  - Unscrew Tema 3820 coupling and double nipple
  - Unscrew upper body and renew Teflon® ball seal (two parts)
  - Apply Klübertemp® YV 93-302to seal unit and install with a tightening torque of 19 Nm.
  - Fit **NEW** stop pin (only original parts from the manufacturer Schroeder fire balloons are to be used)
  - Apply Loctite® 243 to safety screw and re-install

Important notice:

Important Notice: Change of thread sizes for the liquid take-off valve in past years as follows:

VA 50	thread	Valve
1 – 1390	¾“	Ceodeux
1391 – 1552	¾“	CEK
1553 – 1753	19,8	CEK
1754 – 2999	28,8	CEK
from 3000	¾“	Ball valve

tab.6-3: Thread sizes vapour take-off valve

VA 70	thread	Valve
A 1 – A 382	28,8	CEK
A 383 untill today	¾“	Ball valve

tab.6-4: Thread sizes liquid take-off valve



Step 3

- Fill the fuel cylinder with water using the open vent valve
- Stop filling when water is flowing out of the vent valve
- Close vent valve
- Measure circumference at the middle of the fuel cylinder (using a steel measure tape)
- Using a hand pump connected to the ball valve, increase water pressure to 30 bar and check the cylinder for leaks. The circumference at the middle of the cylinder is measured before and after pressurising using a steel measure tape. The circumference must not change significantly at the second measurement. The measured value is to be entered into the data sheet from Schroeder fire balloons.
- Release pressure
- Remove blanking flange and empty fuel cylinder
- Inspect the inside of the fuel cylinder for corrosion and debris using a torch with extension.

The fuel cylinder must be dried after the test! Especially, the liquid take-off valve is to be cleaned with compressed air, as many water droplets remain in the ball valve and liquid dip tube. Those may block the burner valves due to the evaporation heat of propane. Water droplets also remain on the inside of the cylinder wall

At Schroeder fire balloons, warm air with a temperature of 60 °C is blown into the flange of the fill level gauge for one hour. Another method is drying with Methanol.

Step 4

- replace the vapour take-off valve with integrated safety valve and seal with 7 layers of Teflon® tape, certified by DVGW (German Technical & Scientific Association for Gas & Water). **Attention!** Observe thread direction! No Teflon®-tape shall project over the end of the thread and no Teflon® particles shall fall in the fuel cylinder, which could cause blockage of jets on the fuel cylinder and burner.
- replace the flat seal of the fill level gauge. Zinc-coated attachment bolts are to be replaced with stainless steel bolts (if present). Always use bolts with the same length as previously fitted because different flange thicknesses have been installed.
- (socket cap screws with allen inset, material A2)
- perform leak check

Note: The safety valves are to be replaced after 10 years of service life within the scope of the regular checks. The limit between the date of manufacture and the expiry date of the previous inspection limit may be 15 years maximum. This means that the safety valves may be in storage for up to 5 years after the date of manufacture

Step 5

A stamp and inspection date is to be stamped onto the type plate. The details of the stamp are determined by the requirements of the relevant authority of the respective country.

The inspection is then valid for another 10 years.

Caution: For safety reasons, the coupling plug attached to the pressure regulator (outlet to the burner hose) must be installed at all times in such a way that it is not protruding above the guard ring of the fuel cylinder (approx. 45°).

Note: If the 3/8" coupling (double nipple) between ball valve and adapter piece needs to be replaced, it is to be fitted with a tightening torque of 60 Nm.



6.6. 25-years re-evaluation

The 25 year re-evaluation is urgently recommended to be carried out for VA50 and VA70 fuel cylinders manufactured before the 1st July 2004. It is to reassure that the special provision 652 of Chapter 3.3 ADR is not applicable and the transportation is fully legal.
For the transportation outside of Germany it is necessary to have a re-evaluated and fully PI marked cylinder.
A re-evaluation is done according to the requirements of the certificate of the manufacturer, including replacement of the fittings, as safety valve, bleed valve, ball valve wit Pi-marking etc.
The 25-year re-evaluation can only be carried out at Schroeder fire balloons in conjunction with the TÜV (a technical inspection organisation with official authorisation).
The manufacturer recommends to initiate this re-evaluation at the first or second 10-year inspection. After that, the fuel cylinder is no longer subjected to a life limitation.
The 25-year life limitation is a limitation resulting from regulations for the transport of dangerous goods by road (ADR).
This limitation does not necessarily present a limitation of airworthiness, which is regulated by airworthiness certification specification CS 31HB (or similar codes).
For products of Schroeder fire balloons, the airworthiness and its limitation, if applicable, is solely regulated by EASA.
This means that compliance with requirements for road transport (as per ADR) is the sole responsibility of the owner.

Schroeder fire balloons can provide consultation on this subject.



7. Instruments

7.1. Installation of Temperature sensors

Depending on envelope configuration, an attachment provision for the Fly Tec temperature sensor is located approx. 1 m below the envelope top edge consisting of a Velcro®-tape with safety feature, attached to a load tape. Furthermore and depending on configuration, a Velcro®-tape may be installed inside the envelope from top to bottom to enable routing a temperature sensor cable from the basket to the top part of the envelope. This is only required for the instrument no longer in production and which has been mentioned in the introduction of the manual.

Installation of the temperature sensor for FlyTec:

- Peel back the safety Velcro®-tape and open the attachment Velcro®-tape for the housing of the sensor electronics located at the attachment point in the upper part of the envelope.
- Feed the attachment Velcro®-tape from above through one of the tape slots on the sensor. Ensure that the sensor cable is positioned on the same side as the cable routing slot into the envelope underneath the load tape.
- The Velcro®-tape is routed along the underside of the housing of the sensor electronics and then upwards through the tape slot positioned on the other end.
- The housing is moved up to the fixed end of the Velcro-tape and attached to the Velcro® loop tape sewn onto the load tape.
- Close the safety Velcro®-tape to ensure secure attachment
- Another Velcro®-tape is fitted underneath the housing attachment inside the envelope, which needs be un-peeled prior to the installation of the sensor.
- The sensor is then fed from the outside through the opening underneath the load tape.
  - The sensor is to be positioned on the inside of the envelope in such a way that it projects approx. 1 cm out beyond the end of the stand-off sleeve. The Velcro®-tape peeled back is re-fitted to fix the sensor onto the Velcro®-tape ensuring that the final position of the sensor is approx. 5 cm away from the envelope fabric in order to be able to measure the actual gas temperature during flight.

7.2. Change of the battery

When changing the battery of the sensor, the housing is to be un-installed in reverse order as described in 7.1 In order to access the battery, four slotted screws at the bottom of the housing are to be removed using a flat screw driver. The 9 Volt block battery can be removed by unplugging the connector in order to connect a new battery. The new battery is to be positioned at the same location inside the housing. It is to be ensured that the seal, the antenna and the battery cable are at their correct locations and are not caught and damaged during re-assembly. Then the access panel is to be re-fitted to the housing and re-installed on the envelope as described in 7.1.

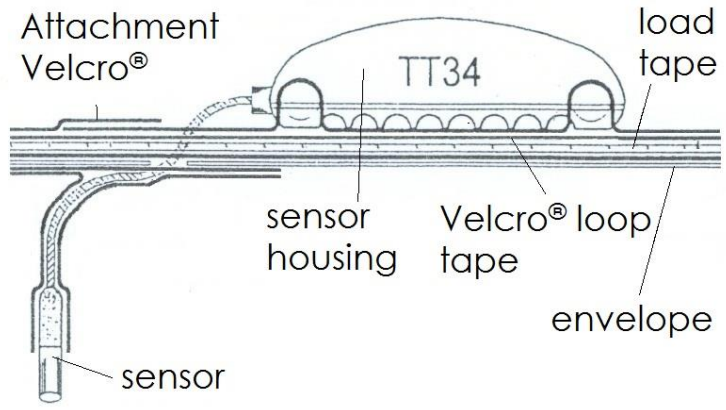

pic.7-1: Sensor attachment

8. Checks

8.1. General

This section of the maintenance manual contains the regular checks recommended by the manufacturer Schroeder fire balloons, which are to be performed at least once a year (annual inspection) or every 100 hours (100-hour inspection) on balloons built by the manufacturer. Following, the following check lists are detailed for the components to be checked.

8.2. Checklist burner

Burner Type component				Non-conformances		
				yes	no	n/a
Burner frame (distortion or deformation, cracks, damages)						
Suspension (karabiners, joints, bearings)						
Pilot light and pilot light valves including functional check						
Blast valve and silent burner valve including functional check						
Pressure gauge including functional check						
Evaporator, jets, flame characteristics including functional check						
Leak check						
Support rods (length, deformation)						
Support rod padding (zip, Velcro®-taps, damages)						
Burner hoses (porosity, damages)						
Hose couplings (O-rings, sealing valves)						
Life limitation of the burner hoses up to:						
Liquid 1	Liquid 2	Liquid 3	Liquid 4			
Vapour 1	Vapour 2	Vapour 3	Vapour 4			
Life limitation of the fuel manifold up to:						
Fuel manifold 1	Fuel manifold 2	Fuel manifold 3	Fuel manifold 4			
Serial No.:	Serial No.:	Serial No.:	Serial No.:			
Notes:						

tab.8-1: Checklist burner

8.3. Checklist envelope

Envelope			Non-conformances		
			yes	no	n/a
Scoop					
Fabric damages (tears, holes)					
Grab-test					
Grab-test result – Deflation system		kg			
Grab-test result – Gore:	Panel:	kg			
Grab-test result – Gore:	Panel:	kg			
Grab-test result – Turning vent		kg			
Top line					
3 registrations					
Nationality flag: set or sewn-on					
Type plate (fire proof)					
Karabiners					
Flying wires / thimbles /ferrules					
Maximum temperature as per indicator					
Crown ring					
Load tapes attached to the crown ring					
Load tapes attached to flying wires					
Load tapes (seams and load tape joints)					
Turning vents (lines, pulleys, rings)					
Deflation system Standard Parachute					
Lines (burn damage, areas of chafing, knots)					
Lines (markings, lengths)					
Pulleys, Rings, return pulleys					
Velcro®-taps (on envelope and parachute)					
Combination and fast Deflation System					
Lines (burn damage, areas of chafing, knots)					
Lines (markings, lengths)					
Pulleys, Rings, return pulleys					
Attachments to load tape structure					
Velcro tapes (attached to the parachute and the envelope)					
Centralising lines					
Safety locks and operating lines					
Notes:					

tab.8-2: Checklist envelope

8.4. Checklist basket

Basket	Non-conformances		
	yes	no	n/a
Basket weave (damages, cracks, lower protective hide)			
Floor / sliding runners (breaks, attachment to weave/frame)			
Type plate			
Carrying handles			
Grab loops / Grab handles			
Cylinder attachments (straps)			
Padding and leather			
Basket wires / thimbles / ferrules / karabiners			
Basket top frame			
Take-off aid and take-off rope			
Notes:			

tab.8-3: Checklist basket

8.5. Checklist Fuel container

Fuel container											
Serial No.:	**Type:**	**TÜV up to:**	**Cylinder body**			**Valves**			**Fill level gauge**		
			Non-conformances			**Non-conformances**			**Non-conformances**		
			yes	no	n/a	yes	no	n/a	yes	no	n/a
Notes:											

tab.8-4: Checklist fuel containers

8.6. Checklist Equipment

Equipment	Non-conformances		
	Yes	No	n/a
Altimeter / rate of climb/descent indicator (combined device)			
Fire extinguisher			
Fire blanket			
First aid kit			
Alternative ignition source			
Rescue knife			
Radio (airborne radio station)			
Transponder (if present)			
Notes:			

tab.8-5: Checklist Equipment

Appendix 1

The Maintenance Manual issue 1987 revision 18 is still valid for components no longer in production. These components are stated below.

Burners:

- Single burner Optima I (all serial numbers)
- Double burner Optima II, Optima IV, FB V (all serial numbers)
- Triple burner Optima IV, FB V (all serial numbers)
- Quadruple burner FB V (all serial numbers)

Fuel cylinders with refill shut-off:

From manufactured fuel cylinders with refill shut-off, only the VA70 type cylinders with the following serial numbers are affected:

- A 789 - A792
- A 1053 – A 1061
- A 1320, A 1321
- A 1358 – A 1361
- A 1588 – A 1590

Baskets:

- V-A

Load frames:

- drawing number 201.1
- drawing number 201.2

Instruments:

- Alto Vario (Alvatherm)
- Optovario
- Variotel