This technical document is approved by the EASA Major change approval#: 10062192

Appendix 3:
Maintenance instruction burner valve modification

1. General

The instructions of this maintenance manual appendix are meant for maintenance organizations of hot air balloons with a national approval and a maintenance course at the manufacturer Schroeder fire balloons. The maintenance and repair of Schroeder fire balloons burner must only be conducted by experienced maintenance personnel. This appendix only describes the maintenance of the in 2017 newly designed main blast valve. Further maintenance tasks are described in chapter "Repair and maintenance of the burner" of the maintenance manual. Relevant provisions of how to handle liquid propane gas installations must be obeyed when working on parts of the heating system.
The annual burner maintenance is only a recommendation. The recommendation is to maintain the burner after 25 hours operating time.

Valve construction:

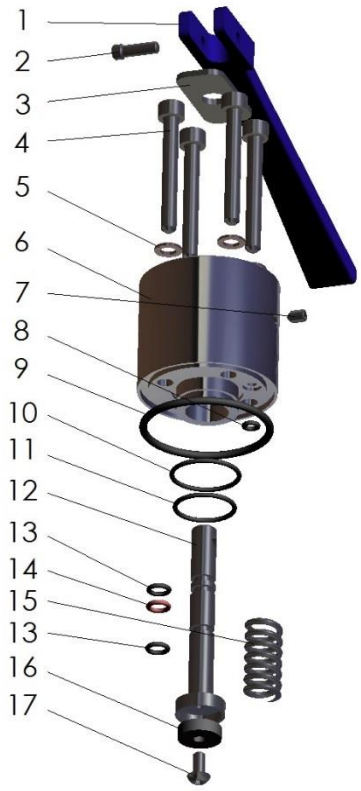

1) Operating lever
2) Threaded bolt
3) Stainless steel washer
4) Cylinder head screw M5x35
5) Copper washer
6) Valve upper body
7) Grub screw M5
8) O-ring 3x1,5
9) O-ring 32x2,5
10) O-ring 20x1,5
11) O-ring 16,5x1,5
12) Valve stem
13) O-ring 5x1,5
14) O-ring 5x1,5 (red)
15) Valve spring 2017
16) Flat seal
17) Half round screw M4x8

pic 1: Exploded view of the burner valve

2. Materials required for maintenance

Tools:
- Allen wrench SW 4
- Allen wrench SW 2,5
- O-ring Remover
- 10 cm wire=2 mm with blunt tip

Consumables per burner:
- Silicone crease OKS 1110
- Loctite 243 intermediate strength
- lint-free cloth or cleaning paper
- Residue-free solvent

Spareparts:

- O-ring 3x1,5
- O-ring 32x2,5
- O-ring 20x1,5
- O-ring 17,5x1,5
- O-ring 5x1,5 (2 pieces)
- O-ring 5x1,5 (red)

3. Disassembling of the valve

Tools
- Allen wrench SW 4
- Allen wrench SW 2,5
- O-ring remover

The handle-bar assembly (picture 2; no.1) must be removed first for the maintenance of the valve. The two screws of each burner are unscrewed (picture 2; no.2) for that. After removing the handle-bar assembly, the operating levers and the heads of the blast valve upper body are accessible. The operating lever can be removed by unscrewing the threaded bolt M5 (pic. 3; no.1).

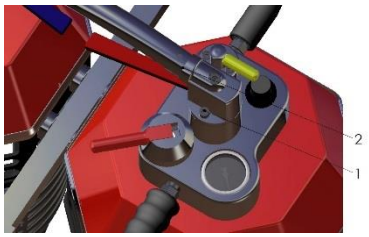

pic 2: Initial assembly

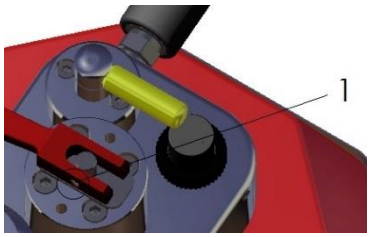

pic 3: Valve upper body

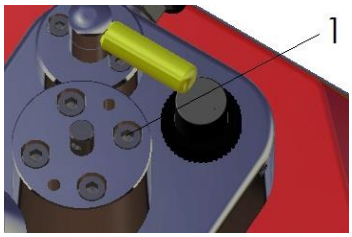

pic 4: Upper body screws

The stainless-steel washer attached to the valve stem (pic.1 no3) can be removed after the operating lever has been taken off.
The valve upper body is attached to the valve block with 4 cylinder head screws M5x35 (pic.4: no.1). By unscrewing the 4 screws, the valve upper body including the valve stem can be lifted off the valve block.

Attention! A force of the valve stem pressure spring inside the valve upper body is poushing the upper body away from the valve block when assembled. This causes the valve upper body to take off the valve block when the 4 screws are loosened. It is important to avoid damages to the upper body caused by tilting the upper body during the disassembly procedure. Try to equally unscrew the 4 screws bit by bit until the pressure spring is relaxed.

The valve stem is pulled out of the valve upper body. The cylinder head screws are removed from the valve upper body. Make sure that the copper washers (Fig. 1; No.5) do not fall out. The copper washer can be reused. The recommendation is to replace them every 10 years or as needed. As a next step, all O-rings can be removed from the valve upper body and the valve stem. Make sure that the surfaces are not being scratched or damaged by the O-ring remover, as this can lead to leaks.

4. Maintenance on the burner valve

The following parts are needed for maintenance:
- O-ring 3x1,5
- O-ring 32x2,5
- O-ring 20x1,5
- O-ring 16,5x1,5
- O-ring 5x1,5 (2 pieces)
- O-ring 5x1,5 (red)
- Wire of 10 cm length d=2 mm with blunt tip
- Silicone grease OKS 1110

After removing the O-rings, the parts must be cleaned and freed form grease. All threaded holes and external threads must be cleaned with a residue-free solvent. Use compressed air to completely blow away the solvent including grease and residue. The threaded holes inside the valve block must also be cleaned. The safe handling of compressed air must be obeyed.
During the cleaning procedure, the sealing washer of the valve stem must be visually inspected. The sealing washer must be replaced if heavily deformed or damaged.
Section 6 of this appendix describes how to proceed.
The valve holes in the valve block must also be visually inspected for damage and contamination. If there are no failures detectable during the visual inspection of all valve parts, the compression spring must be placed on the valve stem. The pressure spring must be attached to the valve stem first, in order not to damage the O-rings by pushing the spring over the inserted O-rings. Silicone grease OKS 1110 or acid-free Vaseline® must be applied to the O-rings of the valve stem. A little grease can be spread into the groove before applying the O-ring.
Lightly grease the valve stem to make it slide smoothly through the valve upper body. The valve bore inside the valve block must also be lightly greased on the upper edge to ensure a smooth gliding of the O-rings. The centric hole of the valve upper body must also lightly be greased to avoid damages to the O-rings and ensure an easy assembly of the valve stem.


pic 5: Valve steam


pic 6: Valve upper body


pic 7: complete valve

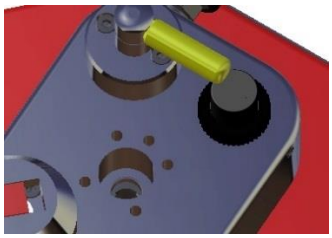
pic 8: Valve block

The silicone O-ring (red O-ring pic. 5; No. 3) can be installed in the first or second groove (counted from the thin end of the valve stem). Technically and functionally, swapping the two grooves makes no difference. Once the stem is equipped with the three O-rings, the upper part of the valve can be fitted with the corresponding O-rings. The O-rings of the valve upper body must only be lightly greased with OKS 1110.

5. Reassembling the valve

After all new O-rings have been installed to the valve upper body, the valve stem can be inserted into the valve upper body. The cross-hole of the stem shaft should be pointing in the same directing as the grub screw on the circumference of the valve upper body (picture 7). The valve can now be mounted onto the valve block. Doing this, it is important to align the bypass bores of valve upper body and valve block and certainly also the threaded bores in the block with the corresponding bores in the upper body. Furthermore, it must be regarded that the upper body is inserted perpendicularly to avoid damages due to tilting. All bores in the upper body must be equipped with copper washers.
The upper body cannot be pushed all the way down to the valve block. The pressure spring of the valve stem causes a gap that cannot be closed by hand but will disappear when tightening the retaining screws. A little Loctite 243 must be applied to the first thread millimeters of the retaining screws for the valve upper body. The screws can now be inserted through the upper body into the valve block. The 4 screws should be tightened evenly bit by bit to avoid heavy tilting of the upper body on the way into the valve block. The tightening torque is 6 Nm.
The next step is to stick the stainless-Steel washer onto the stem shaft and lay it onto valve upper body. Apply a little Vaseline® onto the washer. The grease reduces friction and prevents wear of the burner valve handle. Loctite 243 must be applied to the thread of the threaded bolt for the burner valve handle. The burner valve handle can now be assembled with the valve stem shaft using the threaded bolt. The bores of the burner valve handle must be aligned with the bore of the stem shaft. Stick the threaded bolt with the unthreaded side into the threaded side of the burner valve handle and through the valve stem shaft bore. Screw the threaded bolt into the handle using a 2,5 mm Allen wrench making sure that the bolt is not projecting on any of the two sides of the valve handle. The burner handle bar must be mounted onto the valve upper bodies. Before the assembly the 2 connection pieces that surround the burner valve handles must be lightly greased with Vaseline® on the inner sides, where the burner valve handles are getting in contact to the handle bar connectors. After lubricating the contact surfaces, the burner handle bar can be mounted onto the vale upper bodies. The stainless-steel washers must be inside the burner handle bar connectors and not be jammed underneath. Loctite 243 must be applied to the screws prior to assembling. The tightening torque is 6 Nm.
The maintenance of this valve is completed after this step.

6. Exchange sealing washer of the valve stem

The following items are needed for exchanging the sealing washer:
- Allen wrench 2,5 mm
- residue free solvent
- Loctite 270; high strength
- sealing washer

If a damage to the valve stem sealing washer can be detected, the sealing washer must be replaced. The first step is to unscrew the round head screw with the 2,5 mm Allen wrench. The washer can be removed. The inner and outer threads must be thoroughly freed form dirt and grease with a residue free solvent and pressurized air. The round head screw can be now be pushed through the centre hole of the new sealing washer until the head touches the sealing washer. Again, the projecting thread must be cleaned with the solvent and compressed air. After the thread is cleaned for a second time, Loctite 270 must be applied to the projecting thread of the screw. The sealing washer and screw can finally be screwed into the valve stem. The screw must be turned into the valve stem. The screw must be turned until the head of the screw starts sinking into the rubber of the sealing washer. That should be sufficient for fixation (Torque of appr. 1 to 2 Nm).
Proceed as described in Section 5 after the replacement of the valve stem seal washer.